Noncommutative Geometry in the LHC-Era

Christoph Stephan
Institut für Mathematik
Universität Potsdam

Moriond Conference
EW-Session 2013

Overview

Overview

Analogy: Noncomm. geometry $\leftrightarrow$ Kaluza-Klein space

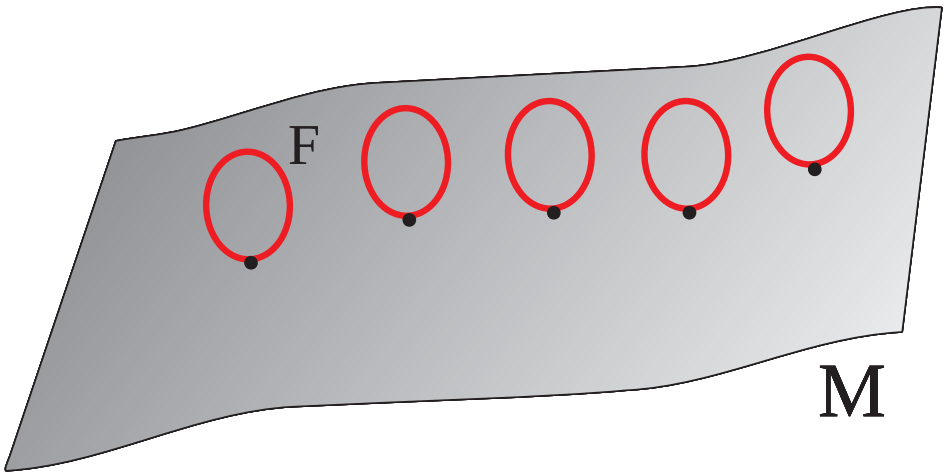

Idea:

$M \to C^\infty(M)$, $F \to$ some "finite or inner space",

differential geometry $\to$ spectral triple

Noncommutative Geometry (A. Connes '90s)

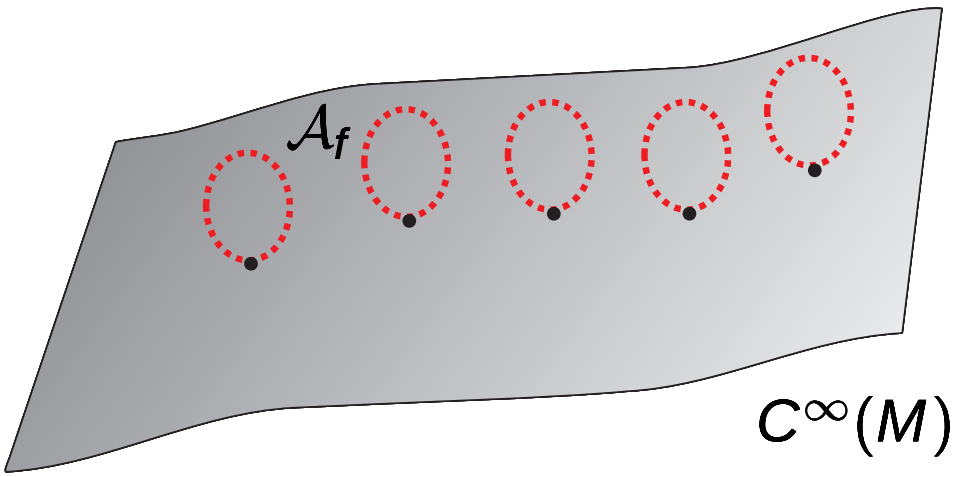

Replacing manifolds by algebras

extra dimension: $F \to \mathcal{A}_f = M_1(\mathbb{K}) \oplus M_2(\mathbb{K}) \oplus \ldots$

Kaluza-Klein space: $M \times F \to \mathcal{A} = C^\infty(M) \otimes \mathcal{A}_f$

Euclidean space(-time)!

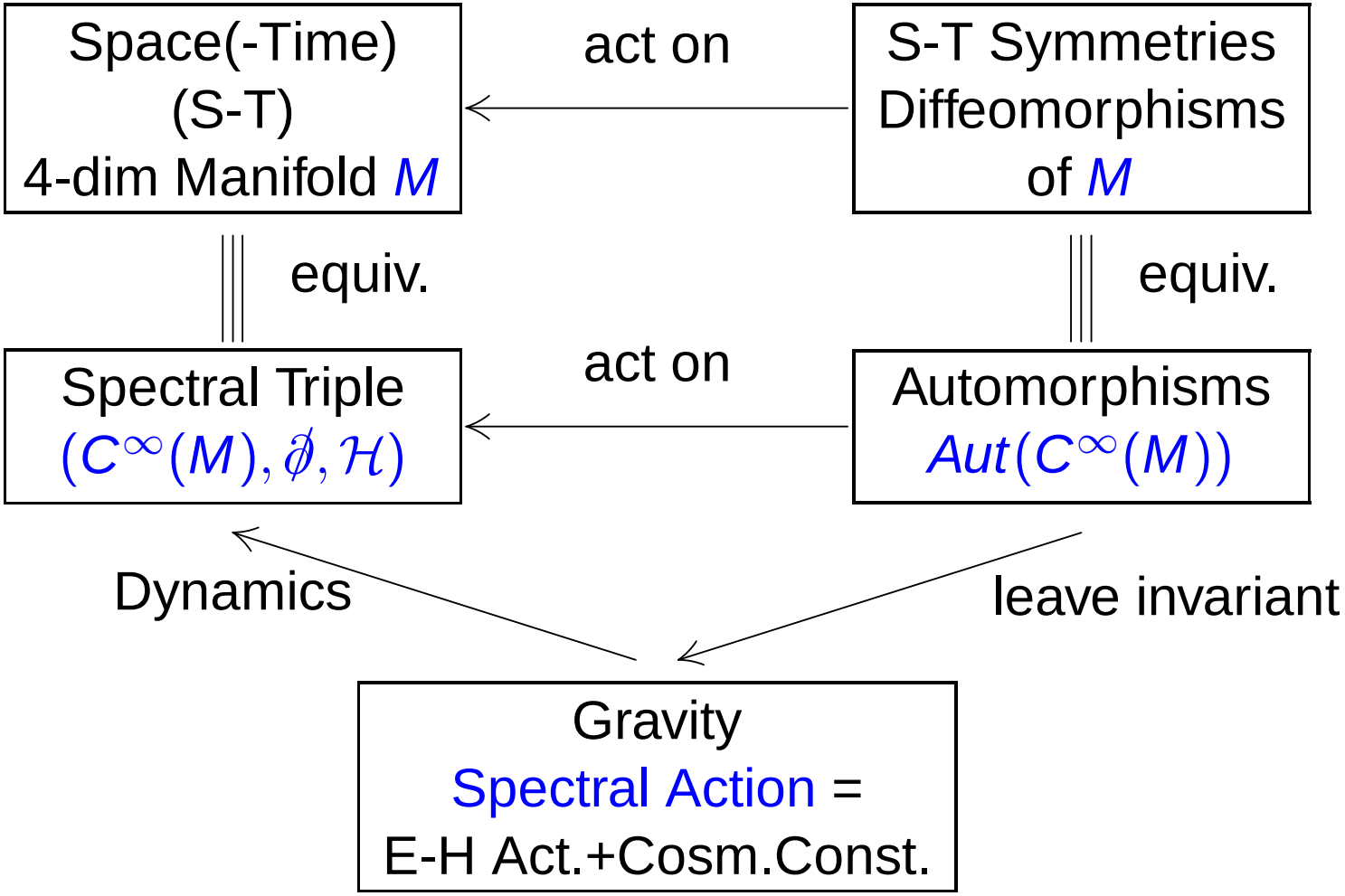

Noncommutative Standard Model
(A.Chamseddine, A.Connes '96):

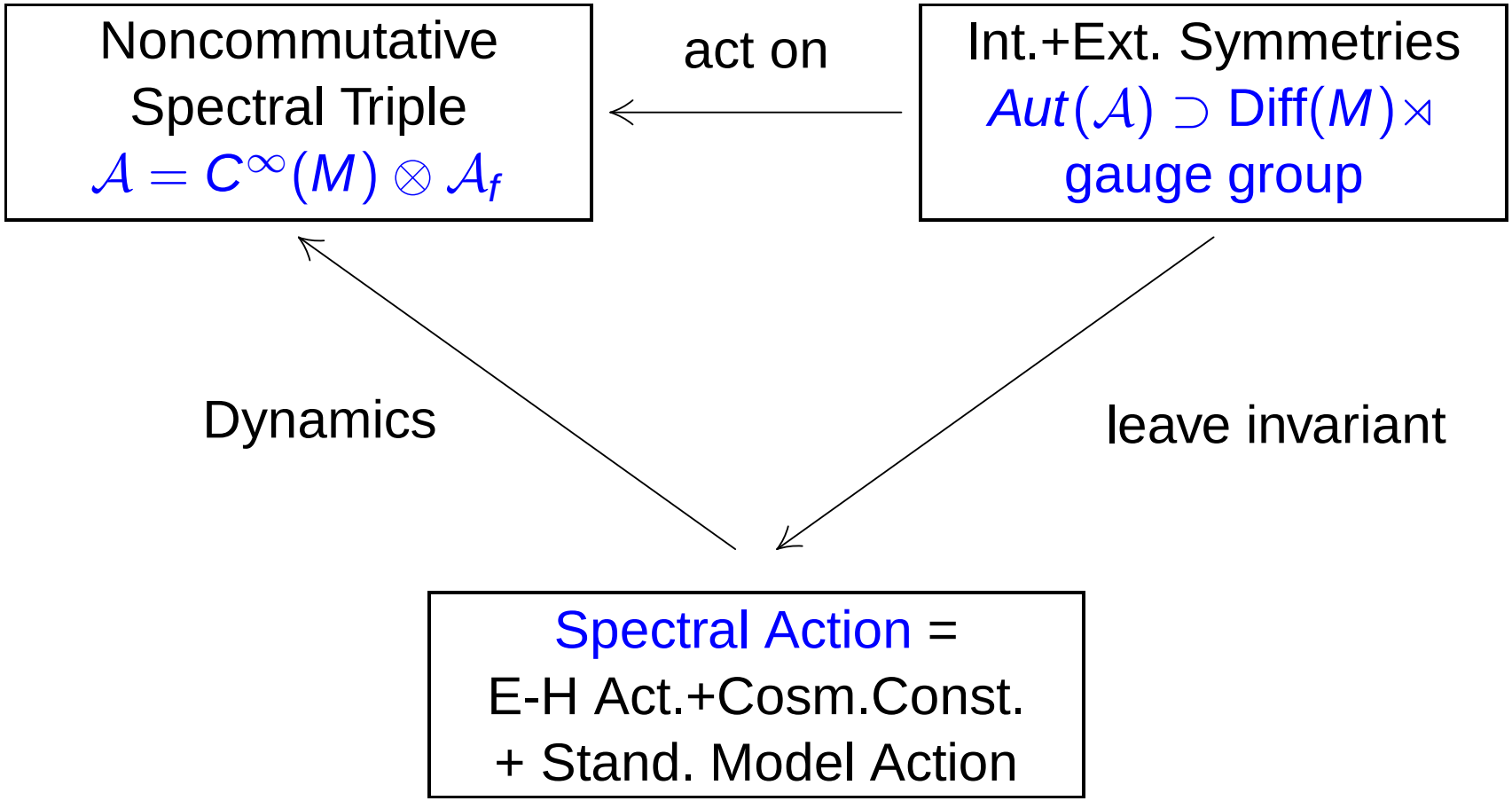

Noncommutative Geometry in a nutshell:

- finite dimensions treated the same as “ordinary” space
- Dirac operator plays the rôle of the metric
- gauge fields and scalar fields are interpreted as “internal” gravitational fields

The Dirac operator plays a multiple role:

$$\boxed{D = \partial\!\!\!/ \otimes 1_f + A\!\!\!/ + \gamma_5 \otimes \Phi}$$

Scalar & Gauge Bosons	Particle Dynamics, Ferm. Mass Matrix	Metric of M, Internal Metric

Generalising to noncommutative internal space:

$$C^\infty(\mathcal{M}) \to C^\infty(\mathcal{M}) \otimes \mathcal{A}_f$$

generalise to Chamseddine-Connes-Dirac operator:

$$\not{\partial} \to \mathcal{D} = \not{\partial} \otimes 1_f + \not{A} + \gamma_5 \otimes \Phi$$

The geometric setup imposes constraints:

- mathematical axioms of Noncomm. Geometry
  $\longrightarrow$ Restrictions on particle content & poss. interactions
- symmetries of finite space
  $\longrightarrow$ determines gauge group
- representation of matrix algebra
  $\longrightarrow$ representation of non-abelian gauge sub-group
- Dirac operator $\longrightarrow$ allowed mass terms / scalar fields

General requirements for Particle Models:

- requirement for internal space
  $\longrightarrow$ Standard Model is a sub-model
- no harmful (Yang-Mills) anomalies
  $\longrightarrow$ representation of abelian gauge sub-group
- Action from Spectral Action
  $\longrightarrow$ high energy effective action + constraints
- low energy physics by renormalisation group flow

Experimental requirements at m_Z:

- $g_1(m_Z) = 0.3575,\ g_2(m_Z) = 0.6514,\ g_3(m_Z) = 1.221$
- $m_{W^\pm} = 80.39$ GeV
- $m_{top} = 172.9 \pm 1.5$ GeV
- $m_{SMS} = 125.5 \pm 1.1$ GeV

The Spectral Action (A. Connes, A. Chamseddine 1996)

$$(\Psi, \mathcal{D}\Psi) + S_{\mathcal{D}}(\Lambda) \quad \text{with } \Psi \in \mathcal{H}$$

- $(\Psi, \mathcal{D}\Psi)$ = fermionic action
  includes Yukawa couplings
  & fermion–gauge boson interactions
  + constraints at Λ
- $S_{\mathcal{D}}(\Lambda)$ = $\sharp$ eigenvalues of $\mathcal{D}$ up to cut-off $\pm\Lambda$
  $\equiv$ Einstein-Hilbert action + Cosm. Const.
  + bosonic action
  + constraints at Λ
- constraints => fewer free parameters

Overview

Constraints on the SM parameters at the cut-off Λ:

$$\frac{5}{3}\, g_1(\Lambda)^2 = g_2(\Lambda)^2 = g_3(\Lambda)^2 = \frac{Y_2(\Lambda)^2}{H(\Lambda)}\,\frac{\lambda(\Lambda)}{24} = \frac{1}{4}\, Y_2(\Lambda)$$

- g_1, g_2, g_3: $U(1)_Y$, $SU(2)_w$, $SU(3)_c$ gauge couplings
- λ: quartic SMS coupling
- Y_2: trace of the Yukawa matrix squared
- H: trace of the Yukawa matrix to the fourth power

Consequences from the SM constraints:

Input:

- Big Desert
- $g_1(m_Z) = 0.3575,\ g_2(m_Z) = 0.6514,\ g_3(m_Z) = 1.221$
- renormalisation group equations
- ($m_{top} = 171.2 \pm 2.1$ GeV)

Output:

- $g_2^2(\Lambda) = g_3^2(\Lambda)$ at $\Lambda = 1.1 \times 10^{17}$ GeV
- $m_{top} < 190$ GeV (follows from constraints alone)
- no 4th SM generation

Excluded by Tevatron & LHC since:

- $m_{SMS} \neq 168.3 \pm 2.5$ GeV
- $\frac{5}{3}\, g_1(\Lambda)^2 \neq g_2(\Lambda)^2$

Overview

Excluded models:

Extensions of the Standard Model:

- AC-model (C.S. '05):
  new particles (A and C) with opposite hypercharge
  dark matter as bound AC-states (Fargion,Khlopov,C.S. '05)
- θ-model (C.S. '07): new particles with $SU_c(D)$-colour
- Vector-Doublet Model (Squellari, C.S. '07):
  new $SU_w(2)$-vector doublets

Problem for models: • $m_{SMS} \geq 170$ GeV
• constraints on g_1, g_2, g_3 at Λ.

SM + $U(1)_X$ scalar field + new fermions (C.S. '10, C.S. t.a.):

- SM as a sub-model: comme il faut!
- gauge group: $U(1)_Y \times SU(2)_w \times SU(3)_c \times U(1)_X$
- new fermions: $X^1_\ell, X^2_r : (0,1,1,+1)$, $X^1_r,\ X^2_\ell : (0,1,1,0)$
  $V^c_\ell,\ V^c_r : (-1/6,1,\bar{3},+1/2)$
  $V^w_\ell,\ V^w_r : (0,\bar{2},1,+1/2)$
  in each SM-generation
- new scalar: $\varphi : (0,1,1,+1)$
- $\mathcal{L}_{scalar} = -\mu_1^2|H|^2 - \mu_2^2|\varphi|^2 + \frac{\lambda_1}{6}|H|^4 + \frac{\lambda_2}{6}|\varphi|^4 + \frac{\lambda_3}{3}|H|^2|\varphi|^2$
- $\mathcal{L}_{ferm} = g_{\nu,X^1}\bar{\nu}_r\varphi X^1_\ell + g_{X^1}\bar{X}^1_\ell\varphi X^1_r + g_{X^2}\bar{X}^2_\ell\varphi X^2_r$
  $+\bar{V}^c_\ell m_c V^c_r + \bar{V}^w_\ell m_w V^w_r + h.c.$
- $\mathcal{L}_{gauge} = 1/g_4^2 F_X^{\mu\nu} F_{X,\mu\nu}$
- $U(1)_Y \times SU(2)_w \times SU(3)_c \times U(1)_X \to U(1)_{el.} \times SU(3)_c$

The constraints at Λ:

- $g_2(\Lambda) = g_3(\Lambda) = \sqrt{\frac{7}{6}}\, g_1(\Lambda) = \sqrt{\frac{3}{2}}\, g_4(\Lambda)$
- $\lambda_1 = 36\, \frac{H}{Y_2^2}\, g_2^2, \quad \lambda_2 = 36\, \frac{H_X + tr(g^2_{\nu,X1}\, g^2_{X1})}{Y_X^2}\, g_2^2$
- $\lambda_3 = 36\, \frac{tr(g_\nu^2)}{Y_2}\, \frac{tr(g^2_{\nu,X1})}{Y_X}\, g_2^2, \quad Y_2 = Y_X = 6\, g_2$
- $Y_X := tr(g^2_{\nu,X1}) + tr(g^2_{X1}) + tr(g^2_{X2})$
- $H_X := tr(g^4_{\nu,X1}) + tr(g^4_{X1}) + tr(g^4_{X2})$

Example: one point in parameter space at Λ

- $Y_2 \approx 3 g_{top} + g_{\nu_\tau}$
- $Y_X \approx g^2_{\nu,X}, \quad H_X \approx g^4_{\nu,X}, \quad tr(g^2_{\nu,X1}\, g^2_{X1}) \ll 1$
- $(m_w)_{ij} \approx \Lambda, \quad (m_c)_{ij} \approx 10^{14}$ GeV

Results for 1-loop renormalisation groups:
(threshold effects have been neglected)

- Constraints
  => $\Lambda \approx 2 \times 10^{18}$ GeV
- $m_{top} \approx 172.9 \pm 1.5$ GeV
- $m_{\varphi_{1,SMS}} \approx 125 \pm 1.1$ GeV
- $m_{\varphi_2} \approx 379 \pm 93$ GeV
- $m_{Z_X} \approx 105 \pm 25$ GeV
- $g_4(m_Z) \approx 0.35$
- $m_{X^1,X^2} \lesssim 50$ GeV
- free parameter: $|\langle\varphi\rangle|$
- φ_2-sector could be much heavier

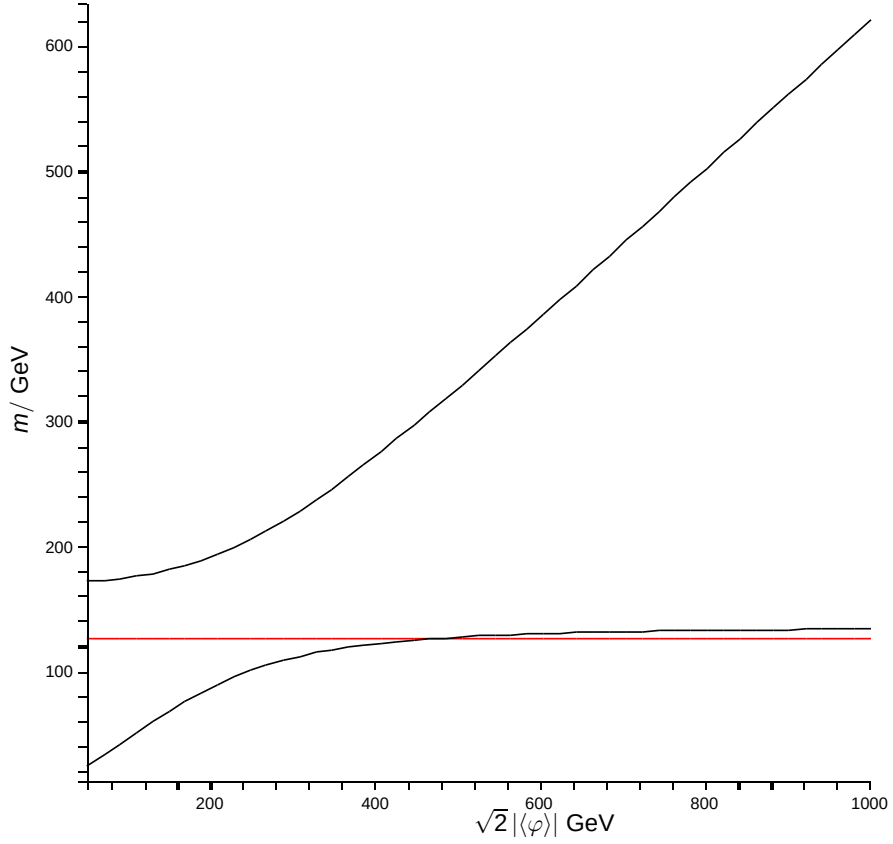

Mass EVs of scalar fields

Overview

Questions & to-do-list

- Is the SM + scalar model compatible with LHC-data?
- Does the SM + scalar model contain viable dark matter candidates?
- Explore parameter space (g_{ν,X^1}, $g^2_{X^1}$, $g^2_{X^2}$, m_W, m_c)
- Extend renormalisation group analysis to n-loop, $n \geq 2$
- Classify models / geometries beyond the Standard Model
- Renorm. group flow for all couplings in the spectral action (Exact Renorm Groups, M. Reuter et al. ?)
- Spectral triples with Lorentzian signature (A. Rennie, M. Paschke, R. Verch,...)

Bibliography:

- The spectral action principle
  A. Chamseddine & A. Connes
  Commun.Math.Phys.186:731-750,1997, hep-th/9606001
  Noncommutative Geometry, Quantum Fields and Motives
  A. Connes & M. Marcolli
  http://www.alainconnes.org/en/downloads.php
- Forces from Connes' geometry, T. Schücker
  Lect.Notes Phys.659:285-350,2005, hep-th/0111236
- Krajewski diagrams and the Standard Model, C.S.
  J.Math.Phys.50:043515 (2009) arXiv:0809.5137 [hep-th]
- New Scalar Fields in Noncommutative Geometry, C.S.
  Phys. Rev. D. 79: 065013 (2009) arXiv:0901.4676 [hep-th]