The MU Enigma

Pierre Aubert, Douglas Hofstadter

Gödel Escher Back

Les **B**rins d'une **G**uirlande **E**ternelle

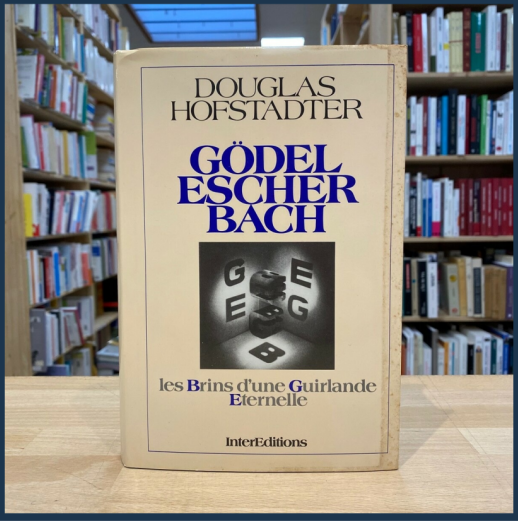

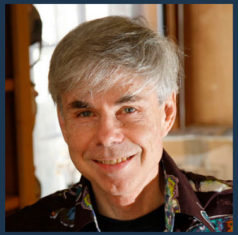

Douglas Hofstadter

The MU Enigma

The MU Enigma

Strings composed only of : **MUI**

The MU Enigma

Strings composed only of : **MUI**

- If **last** char is **I** then we can append **U** Example : **MI** -> **MIU**

The MU Enigma

Strings composed only of : **MUI**

I	If **last** char is **I** then we can append **U**	Example : **MI** -> **MIU**
II	**Mx** => **Mxx**	Example : **MIU** -> **MIUIU**

The MU Enigma

Strings composed only of : **MUI**

I	If **last** char is **I** then we can append **U**	Example : **MI** -> **MIU**
II	**Mx** => **Mxx**	Example : **MIU** -> **MIUIU**
III	**III** => **U**	Example : **UMIIIMU** -> **UMUMU**

The MU Enigma

Strings composed only of : **MUI**

I	If **last** char is **I** then we can append **U**	Example : **MI** -> **MIU**
II	**Mx** => **Mxx**	Example : **MIU** -> **MIUIU**
III	**III** => **U**	Example : **UMIIIMU** -> **UMUMU**
IV	**UU** => ∅	Example : **MUUUIII** -> **MUIII**

The MU Enigma

Strings composed only of : **MUI**

I	If **last** char is **I** then we can append **U**	Example : **MI** -> **MIU**
II	**Mx** => **Mxx**	Example : **MIU** -> **MIUIU**
III	**III** => **U**	Example : **UMIIIMU** -> **UMUMU**
IV	**UU** => ∅	Example : **MUUUIII** -> **MUIII**

The Enigma : **MI** $\xrightarrow{?}$ **MU**

The MU Enigma (solution)

Strings composed only of : **MUI**

The MU Enigma (solution)

Rules

Strings composed only of : **MUI**

I •••I ⟶ •••IU

The MU Enigma (solution)

Rules

Strings composed only of : **MUI**

I

II

The MU Enigma (solution)

Rules

Strings composed only of : **MUI**

I

II

III

The MU Enigma (solution)

Rules

Strings composed only of : **MUI**

I ••• I → ••• I U

II M ••• → M ••• •••

III I I I → U

IV U U → ∅

The MU Enigma (solution)

Rules

Strings composed only of : **MUI**

I ••• I → ••• I U

II M ••• → M ••• •••

III I I I → U

IV U U → ∅

The Enigma :

M I → ? → M U

The MU Enigma (solution)

Rules

Strings composed only of : **MUI**

I

II

III

IV

The Enigma :

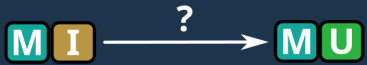

Think **out of the box**

The MU Enigma (solution)

Rules

Strings composed only of : **MUI**

I ••• I → ••• I U

II M ••• → M ••• •••

III I I I → U

IV U U → ∅

M U

The Enigma :

M I → ? → M U

Think **out of the box**

The MU Enigma (solution)

Rules

Strings composed only of : **MUI**

I ••• I → ••• I U

II M ••• → M ••• •••

III I I I → U

IV U U → ∅

The Enigma :

Think **out of the box**

The MU Enigma (solution)

Rules

Strings composed only of : **MUI**

I ••• I → ••• I U

II M ••• → M ••• •••

III I I I → U

IV U U → ∅

The Enigma :

M I → ? → M U

Think **out of the box**

M U → IV^{-1} → M U U U

n

The MU Enigma (solution)

Rules

Strings composed only of : **MUI**

I : ••• I → ••• I U

II : M ••• → M ••• •••

III : I I I → U

IV : U U → ∅

The Enigma :

M I → ? → M U

Think **out of the box**

M U → IV^{-1} → M U U U → n → III^{-1} → M

U

The MU Enigma (solution)

Rules

Strings composed only of : **MUI**

I : ••• I → ••• I U

II : M ••• → M ••• •••

III : I I I → U

IV : U U → ∅

The Enigma :

M I → ? → M U

Think **out of the box**

M U → IV^{-1} → M U U U (U U U : n)

→ III^{-1} → M I I I I I I U (I I I I I I : n)

The MU Enigma (solution)

Rules

Strings composed only of : **MUI**

I : ••• I → ••• I U

II : M ••• → M ••• •••

III : I I I → U

IV : U U → ∅

The Enigma :

M I → ? → M U

Think **out of the box**

M U → IV^{-1} → M U U U (U U : n)

→ III^{-1} → M I I I I I I U (I I I I I I : n)

→ I (6×n)

The MU Enigma (solution)

Rules

Strings composed only of : **MUI**

I $\quad \bullet\bullet\bullet I \rightarrow \bullet\bullet\bullet IU$

II $\quad M\bullet\bullet\bullet \rightarrow M\bullet\bullet\bullet\bullet\bullet\bullet$

III $\quad III \rightarrow U$

IV $\quad UU \rightarrow \varnothing$

MI

The Enigma :

$MI \xrightarrow{?} MU$

Think **out of the box**

$MU \xrightarrow{IV^{-1}} MUUU$ (UU = n)

$MUUU \xrightarrow{III^{-1}} MIIIIIIU$ (III = n)

I = 6×n

The MU Enigma (solution)

Rules

Strings composed only of : **MUI**

I $\quad \bullet\bullet\bullet I \rightarrow \bullet\bullet\bullet IU$

II $\quad M\bullet\bullet\bullet \rightarrow M\bullet\bullet\bullet\bullet\bullet\bullet$

III $\quad III \rightarrow U$

IV $\quad UU \rightarrow \varnothing$

$MI \xrightarrow{p\times II} M\underbrace{I}_{2^p}$

The Enigma :

$MI \xrightarrow{?} MU$

Think **out of the box**

$MU \xrightarrow{IV^{-1}} M\underbrace{UUU}_{n}U$

$\xrightarrow{III^{-1}} M\underbrace{IIIIIII}_{n}U$

$\underbrace{I}_{6\times n}$

The MU Enigma (solution)

Rules

Strings composed only of : **MUI**

I ••• I → ••• I U

II M ••• → M ••• •••

III I I I → U

IV U U → ∅

M I —p×II→ M I (2^p)

I → M I U (2^p)

The Enigma : M I —?→ M U

Think **out of the box**

M U —IV^{-1}→ M U U U (n)

—III^{-1}→ M I I I I I I U (n)

I ($6\times n$)

The MU Enigma (solution)

Rules

Strings composed only of : **MUI**

I ••• I → ••• I U

II M ••• → M ••• •••

III I I I → U

IV U U → ∅

M I —p×II→ M I (2^p)

—I→ M I U (2^p)

The Enigma :

M I —?→ M U

Think **out of the box**

M U —IV^{-1}→ M U U U (n)

—III^{-1}→ M I I I I I I U (n)

$2^p \overset{?}{\propto} 6\times n$

I ($6\times n$)

The MU Enigma (solution)

Rules

Strings composed only of : **MUI**

I $\quad \bullet\bullet\bullet I \rightarrow \bullet\bullet\bullet IU$

II $\quad M\bullet\bullet\bullet \rightarrow M\bullet\bullet\bullet\bullet\bullet\bullet$

III $\quad III \rightarrow U$

IV $\quad UU \rightarrow \varnothing$

$MI \xrightarrow{p\times II} M\underbrace{I}_{2^p}$

$M\underbrace{I}_{2^p} \xrightarrow{I} M\underbrace{I}_{2^p}U$

The Enigma :

$MI \xrightarrow{?} MU$

Think **out of the box**

$MU \xrightarrow{IV^{-1}} M\underbrace{UU}_{n}U$

$M\underbrace{UU}_{n}U \xrightarrow{III^{-1}} M\underbrace{IIIIII}_{n}U$

$2^p \overset{?}{\propto} 6\times n$

$2^p \overset{?}{\propto} 3$

$\underbrace{I}_{6\times n}$

The MU Enigma (solution)

Rules

Strings composed only of : **MUI**

I ••• I → ••• I U

II M ••• → M ••• •••

III I I I → U

IV U U → ∅

M I —p×II→ M I (2^p)

—I→ M I U (2^p)

The Enigma :

M I —?→ M U

Think **out of the box**

M U —IV^{-1}→ M U U U (U U : n)

—III^{-1}→ M I I I I I I U (I I I I I I : n)

?

$2^p \propto 6 \times n$

$2^p \not\propto 3$

Impossible

I : $6 \times n$

The MU Enigma (solution)

Rules

Strings composed only of : **MUI**

I $\quad \bullet\bullet\bullet I \rightarrow \bullet\bullet\bullet IU$

II $\quad M\bullet\bullet\bullet \rightarrow M\bullet\bullet\bullet\bullet\bullet\bullet$

III $\quad III \rightarrow U$

IV $\quad UU \rightarrow \varnothing$

$MI \xrightarrow{p\times II} M\underbrace{I}_{2^p}$

$M\underbrace{I}_{2^p} \xrightarrow{I} M\underbrace{I}_{2^p}U$

The Enigma :

$MI \xrightarrow{?} MU$

Think **out of the box**

$MU \xrightarrow{IV^{-1}} M\underbrace{UU}_{n}U$

$M\underbrace{UU}_{n}U \xrightarrow{III^{-1}} M\underbrace{IIIIIII}_{n}U$

$\underbrace{I}_{6\times n}$

$2^p \overset{?}{\propto} 6\times n$

$2^p \not\propto 3$

Impossible

MU is not derivable from MI

The MU Enigma fix

Strings composed only of : **MUI**

Rules'

I •••I ⟶ •••IIIU

II M••• ⟶ M••••••

III III ⟶ U

IV UU ⟶ ∅

The Enigma :

MI ⟶ ? MU

The MU Enigma fix

Strings composed only of : **MUI**

Rules'

I •••I ⟶ •••IIIU

II M••• ⟶ M••••••

III III ⟶ U

IV UU ⟶ ∅

MI

The Enigma :

MI ⟶ ? ⟶ MU

The MU Enigma fix

Strings composed only of : **MUI**

Rules'

I ••• I → ••• I I I U

II M ••• → M ••• •••

III I I I → U

IV U U → ∅

The Enigma :

M I → ? → M U

M I → 2×II → M I I I I

The MU Enigma fix

Strings composed only of : **MUI**

Rules'

I : ••• I → ••• I I I U

II : M ••• → M ••• •••

III : I I I → U

IV : U U → ∅

The Enigma :

M I → ? → M U

M I → 2×II → M I I I I → I → M I I I I I I I U

The MU Enigma fix

Strings composed only of : **MUI**

Rules'

I : ••• I → ••• I I I U

II : M ••• → M ••• •••

III : I I I → U

IV : U U → ∅

The Enigma :

M I → ? → M U

M I → 2×II → M I I I I → I → M I I I I I I I U → III → M U U U

The MU Enigma fix

Strings composed only of : **MUI**

Rules'

I : ••• I → ••• I I I U

II : M ••• → M ••• •••

III : I I I → U

IV : U U → ∅

The Enigma :

M I → ? → M U

M I → (2×II) → M I I I I → (I) → M I I I I I I I U → (III) → M U U U → (IV) → M U

The MU Enigma fix 2

Strings composed only of : **MUI**

Rules''

I : ••• I → ••• I I U

II : M ••• → M ••• ••• •••

III : I I I I I I I → U

IV : U U → ∅

The Enigma :

The MU Enigma fix 2

Strings composed only of : **MUI**

Rules''

I ••• I → ••• I I U

II M ••• → M ••• ••• •••

III I I I I I I I → U

IV U U → ∅

The Enigma :

M I → ? → M U

M I

The MU Enigma fix 2

Strings composed only of : **MUI**

Rules''

I ••• I → ••• I I U

II M ••• → M ••• ••• •••

III I I I I I I I → U

IV U U → ∅

The Enigma :

M I → ? → M U

M I → 3×II → M I I I I I I I

$3^3=27$

The MU Enigma fix 2

Strings composed only of : **MUI**

Rules''

I	••• I	→	••• I I U
II	M •••	→	M ••• ••• •••
III	I I I I I I I	→	U
IV	U U	→	∅

The Enigma :

M I $\xrightarrow{?}$ M U

M I $\xrightarrow{3\times II}$ M $\underbrace{\text{I I I I I I I}}_{3^3=27}$

I → M $\underbrace{\text{I I I I I I I I}}_{3^3=27}$ U

The MU Enigma fix 2

Strings composed only of : **MUI**

Rules''

I : ••• I → ••• I I U

II : M ••• → M ••• ••• •••

III : I I I I I I I → U

IV : U U → ∅

The Enigma : M I → ? → M U

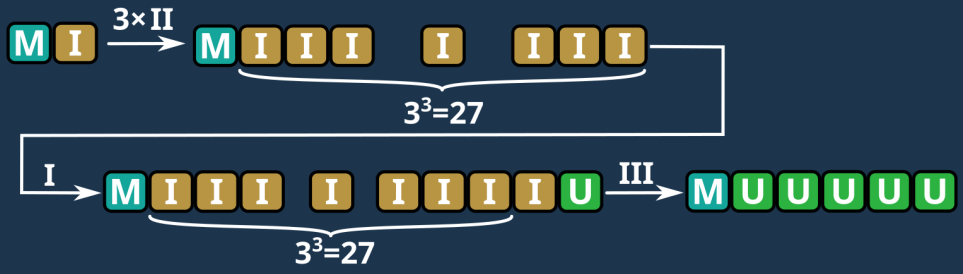

The MU Enigma fix 2

Strings composed only of : **MUI**

Rules''

I : ••• I → ••• I I U

II : M ••• → M ••• ••• •••

III : I I I I I I I → U

IV : U U → ∅

The Enigma : M I → ? → M U

M I → 3×II → M I I I I I I I

$3^3=27$

I → M I I I I I I I I U → III → M U U U U U → IV → M U

$3^3=27$

The MU Enigma fix 3

Strings composed only of : **MUI**

Rules'''

I ••• I → ••• I I I I I U

II M ••• → M ••• ••• ••• ••• •••

III I I I I I I I → U

IV U U U → ∅

The Enigma :

M I → ? → M U

The MU Enigma fix 3

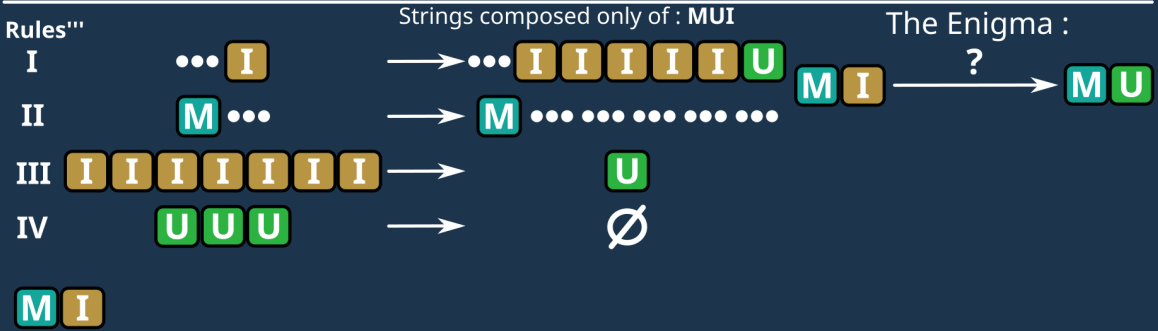

The MU Enigma fix 3

Rules'''

Strings composed only of : **MUI**

I ••• I → ••• I I I I I U

II M ••• → M ••• ••• ••• ••• •••

III I I I I I I I → U

IV U U U → ∅

M I —5×II→ M I I I I I I I

$5^5=3125$

The Enigma :

M I —?→ M U

The MU Enigma fix 3

Rules'''

I ••• I → ••• I I I I I U

II M ••• → M ••• ••• ••• ••• •••

III I I I I I I I → U

IV U U U → ∅

Strings composed only of : **MUI**

The Enigma : M I ? → M U

M I 5×II → M I I I I I I I I

$5^5=3125$

I → M I I I I I I I I I I I U

$5^5=3125$

The MU Enigma fix 3

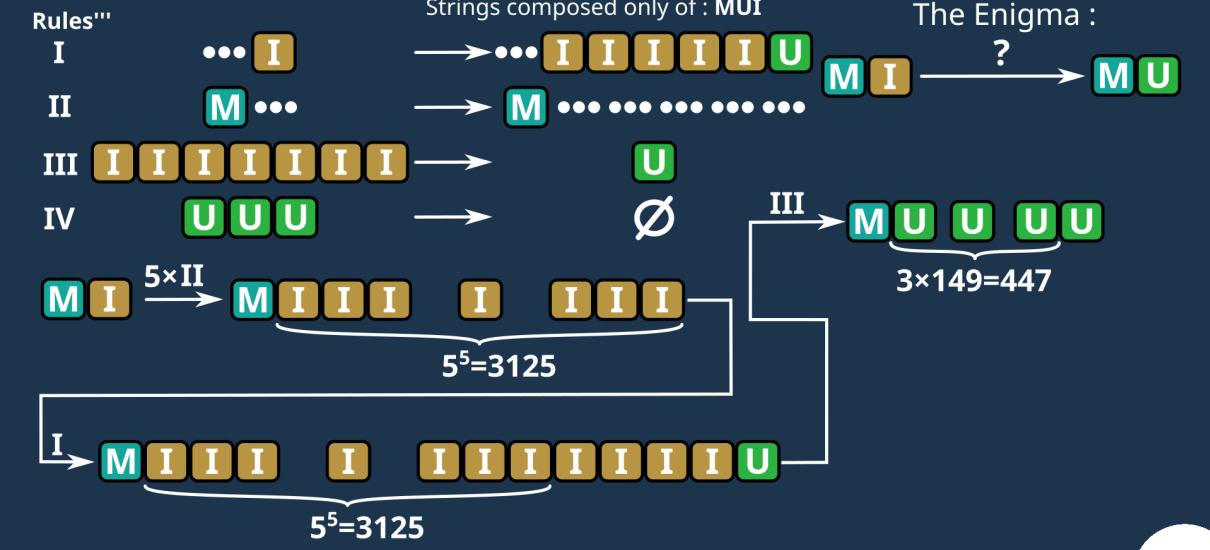

The MU Enigma fix 3

Rules'''

I ••• I → ••• I I I I I U

II M ••• → M ••• ••• ••• ••• •••

III I I I I I I I → U

IV U U U → ∅

Strings composed only of : **MUI**

The Enigma :

M I → ? → M U

M I → 5×II → M I I I I I I I I

5^5=3125

I → M I I I I I I I I I I U

5^5=3125

III → M U U U U

3×149=447

IV → M U