PCIe400
Thermal Model

Jean-Marc NAPPA on behalf of the LAPP team

Simulation Passive (v7)

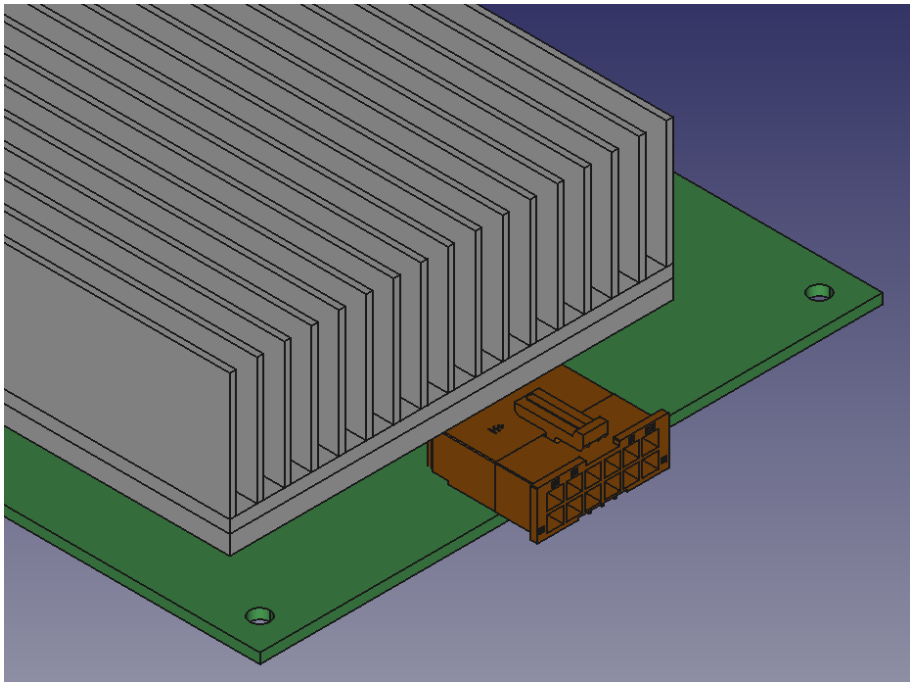

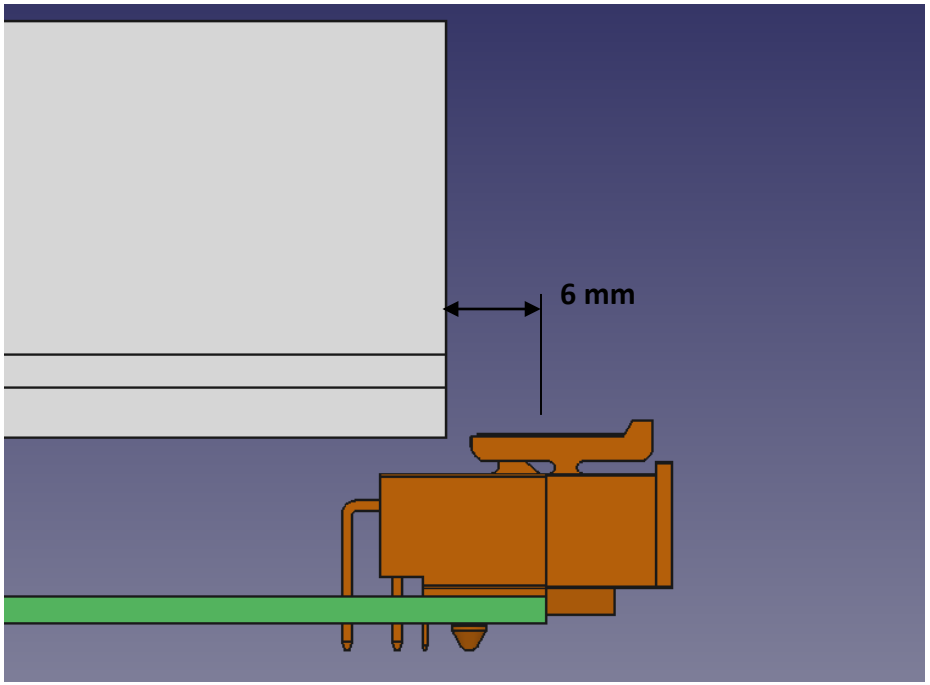

Simulation Passive (v7)

- **Volume Air 312x100x36.4mm**
- **Air Flow : 5 m/s**
- **Tamb : 38 °C**

- FPGA Agilex

- **Dimension 56x66x4.824mm**
- **Heat Sink 251x70x20mm with Fins 17x1mm (Aluminum)**
- **Vapor Chamber 251x70x3mm with Encoche 59.7x46.6x4.7mm (Copper)**
- **Heat source : 156 W**

- OBT

- **Heat Sink 251x23x18.5mm with Fins 8x1mm (Aluminum)**
- **Vapor Chamber 251x20x3mm (Copper)**
- **Heat rate LD : 3.89 W**
- **Heat rate TIA : 3.63 W**

Simulation Passive (v7)

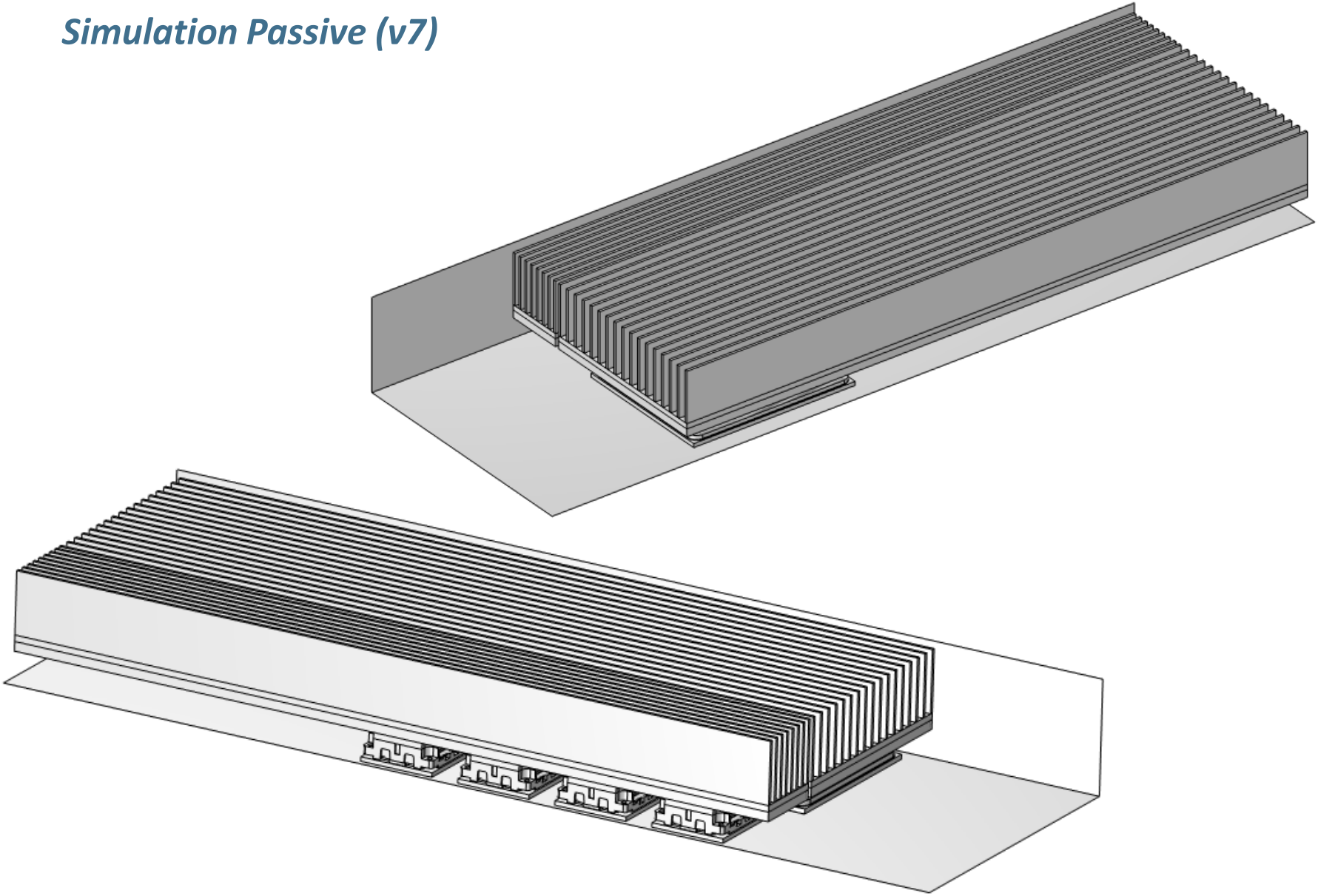

Simulation Passive (v7) – FPGA

W pcb (mm)	W HeatSink (mm)	T Die (°C)	T IHS (°C)	T VC (°C)	T HeatSink (°C)
254.00	193.00	54.821	50.780	49.802	49.032
274.00	213.00	54.621	50.580	49.576	48.882
293.00	232.00	54.441	50.407	49.375	48.737
312.00	251.00	54.255	50.218	49.162	48.577

W pcb (mm)	W HeatSink (mm)	Rθ J-C (°C/W)	Rθ C-V (°C/W)	Rθ V-S (°C/W)	Rθ S-A (°C/W)
254.00	193.00	0.025987	0.0062703	0.0049367	0.070752
274.00	213.00	0.026004	0.0064396	0.0044522	0.069787
293.00	232.00	0.025956	0.0066194	0.0040909	0.068862
312.00	251.00	0.025974	0.0067682	0.0037550	0.067832

Simulation Passive (v7) – OBT

W pcb (mm)	W HeatSink (mm)	T1 Die (°C)	T1 Case (°C)	T2 Die (°C)	T2 Case (°C)
254.00	193.00	55.293	45.949	55.044	45.734
274.00	213.00	55.278	45.944	55.053	45.724
293.00	232.00	55.238	45.892	54.985	45.679
312.00	251.00	55.222	45.874	54.954	45.673

W pcb (mm)	W HeatSink (mm)	T3 Die (°C)	T3 Case (°C)	T4 Case (°C)	T4 Case (°C)
254.00	193.00	55.055	45.710	54.928	45.580
274.00	213.00	55.030	45.702	54.925	45.576
293.00	232.00	54.990	45.652	54.859	45.529
312.00	251.00	54.995	45.642	54.865	45.528

W pcb (mm)	W HeatSink (mm)	T VC (°C)	T HeatSink (°C)
254.00	193.00	44.706	44.401
274.00	213.00	44.668	44.391
293.00	232.00	44.601	44.348
312.00	251.00	44.582	44.352

Simulation Passive (v7) – OBT

W pcb (mm)	W HeatSink (mm)	Rθ J-C (°C/W)	Rθ C-V (°C/W)	Rθ V-S (°C/W)	Rθ S-A (°C/W)
254.00	193.00	0.31036	0.016977	0.010131	0.21280
274.00	213.00	0.31031	0.017512	0.0091939	0.21247
293.00	232.00	0.31017	0.017826	0.0083935	0.21105
312.00	251.00	0.31015	0.018007	0.0076476	0.21118

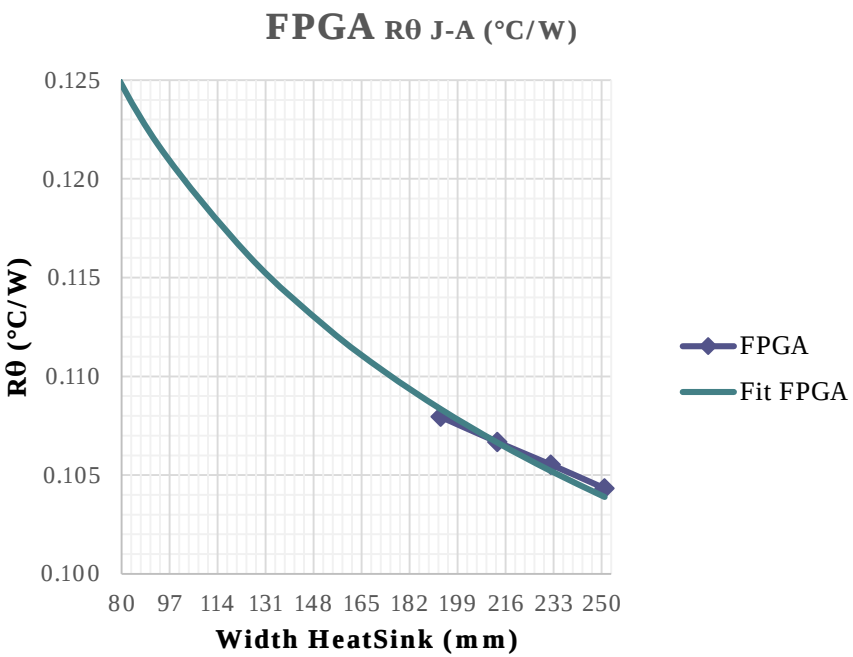

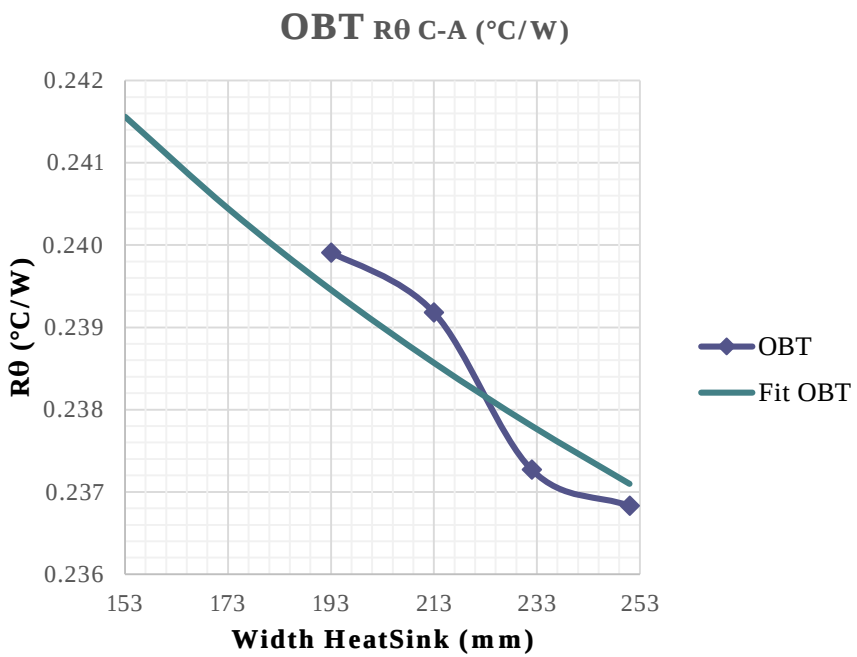

Simulation Passive (v8)

- **Volume Air 214x100x36.4mm**
- **Tamb : 38 °C**

- FPGA Agilex

- **Dimension 56x66x4.824mm**
- **Heat Sink 80x70x28mm with Fins 17x1mm (Aluminum)**
- **Heat source : 156 W**

- OBT

- **Heat Sink 153x23x23mm with Fins 8x1mm (Aluminum)**
- **Heat rate LD : 3.89 W**
- **Heat rate TIA : 3.63 W**

Simulation Passive (v8)

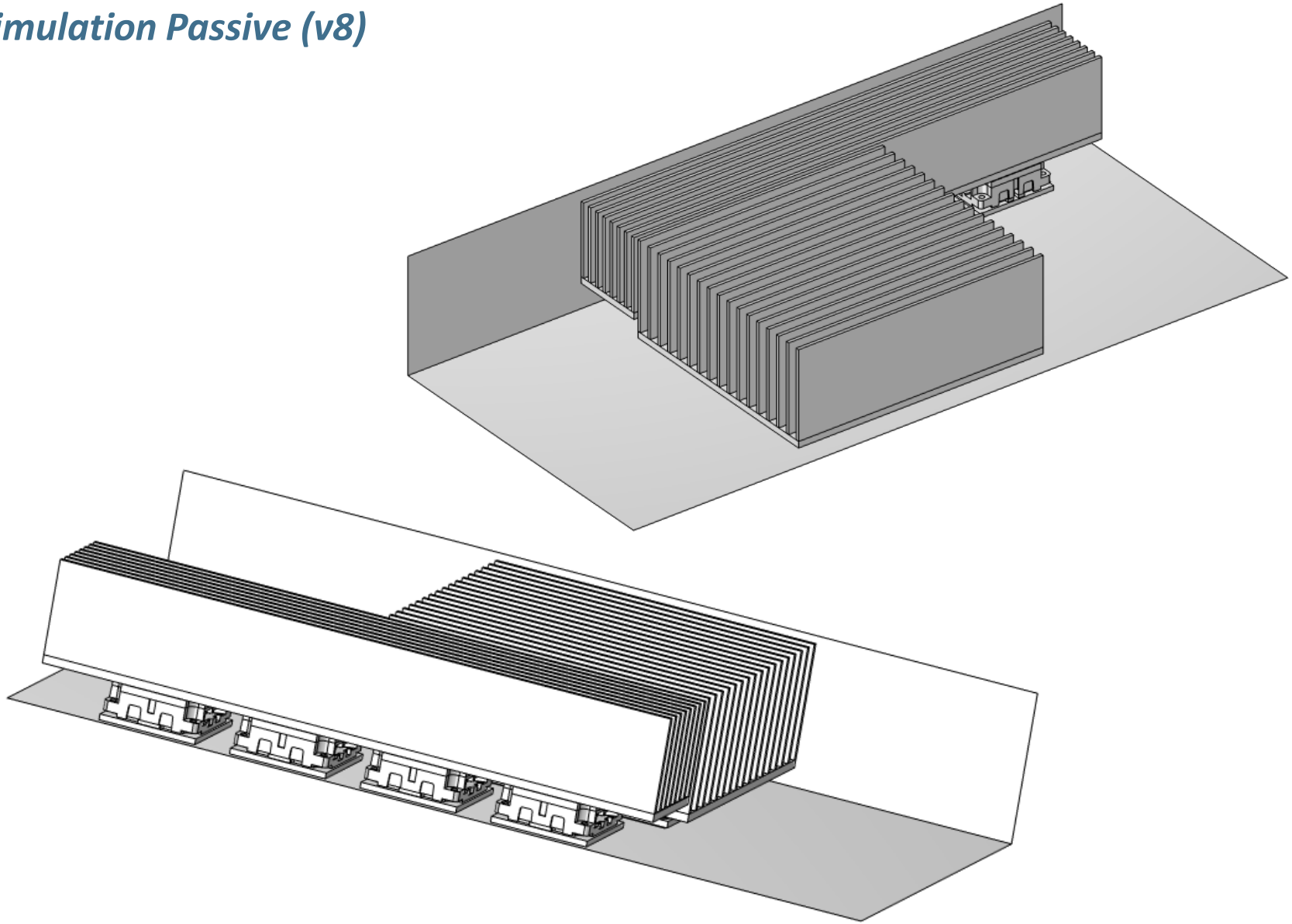

Simulation Passive (v8) – FPGA

U0 (m/s)	T Die (°C)	T IHS (°C)	T HeatSink (°C)
1.0000	103.71	95.677	88.395
2.0000	81.685	73.673	66.491
3.0000	74.019	66.035	58.940
4.0000	70.051	62.093	55.079
5.0000	67.601	59.665	52.715

U0 (m/s)	Rθ J-C (°C/W)	Rθ C-V (°C/W)	Rθ S-A (°C/W)
1.0000	0.043635	0.046702	0.32320
2.0000	0.048100	0.046062	0.18272
3.0000	0.049013	0.045501	0.13430
4.0000	0.049347	0.044982	0.10954
5.0000	0.049471	0.044576	0.094370

Simulation Passive (v8) – OBT

U0 (m/s)	T1 Die (°C)	T1 Case (°C)	T2 Die (°C)	T2 Case (°C)	T3 Die (°C)	T3 Case (°C)	T4 Die (°C)	T4 Case (°C)
1.0000	87.325	77.955	84.836	75.456	80.552	71.100	74.577	65.144
2.0000	68.521	59.152	67.147	57.772	64.415	54.973	60.339	50.917
3.0000	62.452	53.091	61.586	52.222	59.558	50.127	56.343	46.938
4.0000	59.501	50.149	58.870	49.519	57.225	47.804	54.496	45.109
5.0000	57.754	48.410	57.229	47.892	55.822	46.412	53.413	44.045

U0 (m/s)	T HeatSink (degC)
1.0000	70.040
2.0000	53.427
3.0000	48.371
4.0000	45.966
5.0000	44.549

Simulation Passive (v8) – OBT
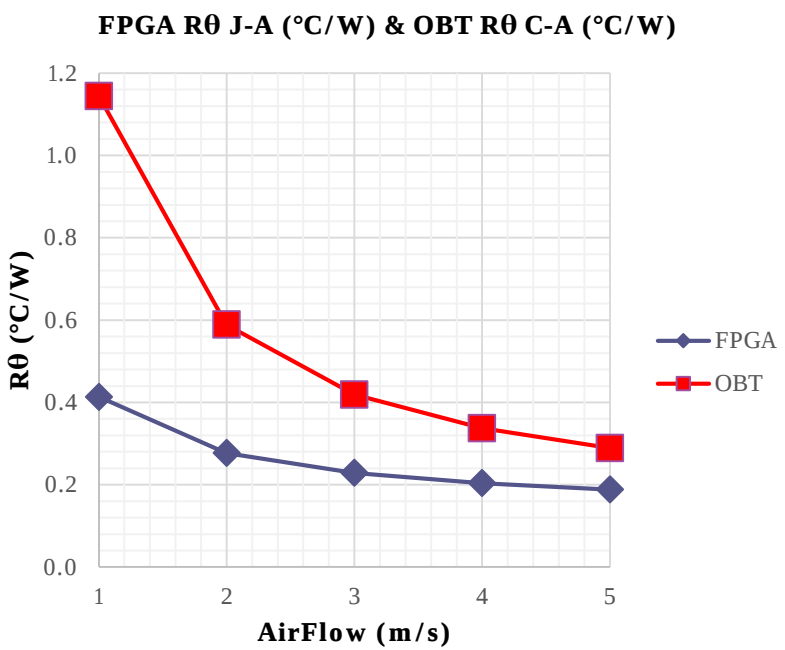
U0 (m/s)	Rθ J-C (°C/W)	Rθ C-S (°C/W)	Rθ S-A (°C/W)
1.0000	0.31279	0.078901	1.0652
2.0000	0.31258	0.075681	0.51286
3.0000	0.31219	0.073920	0.34477
4.0000	0.31176	0.072445	0.26483
5.0000	0.31135	0.071162	0.21771