LAPP
Laboratoire d'Annecy de Physique des Particules

ProtoDUNE CRP Upgrade

13/02/2020

B.Aimard, G.Deleglise, D.Duchesneau, N.Geffroy, J-M.Nappa, F.Peltier, S.Vilalte

cnrs
UNIVERSITÉ SAVOIE MONT BLANC

Modal study to evaluate CRP stiffness based on first deformation mode (saddle shape)

Actual CRPs
Invar mass : 140kg
F1 ~ 2 Hz

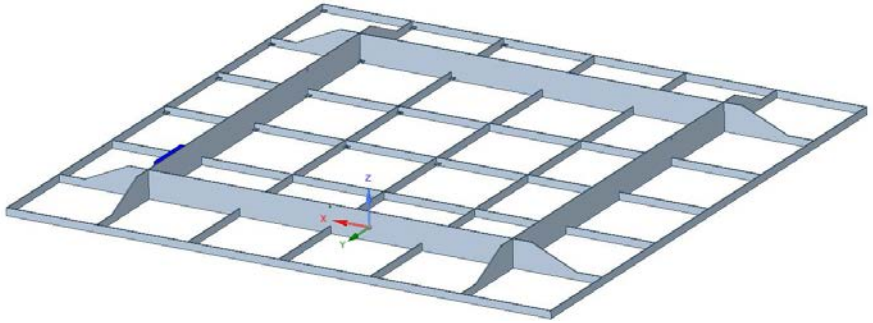

Shape of the first mode :

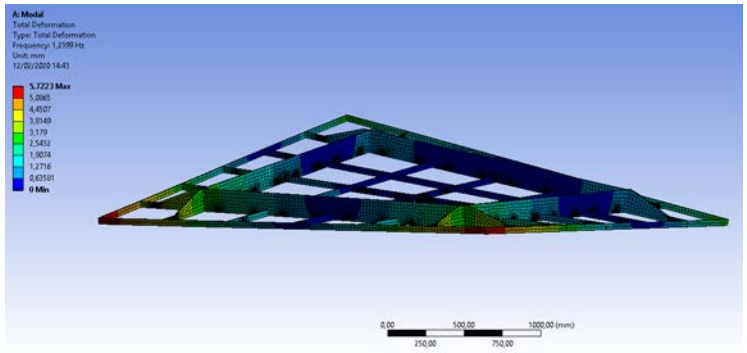

1st optimization :
Invar mass 330 kg
F1 ~ 15 Hz

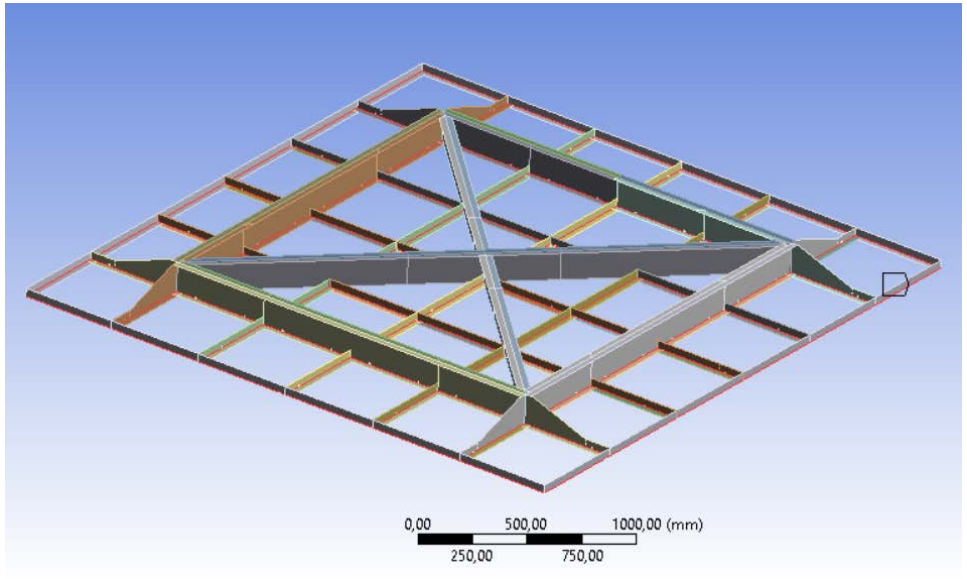

Invar frame optimisation

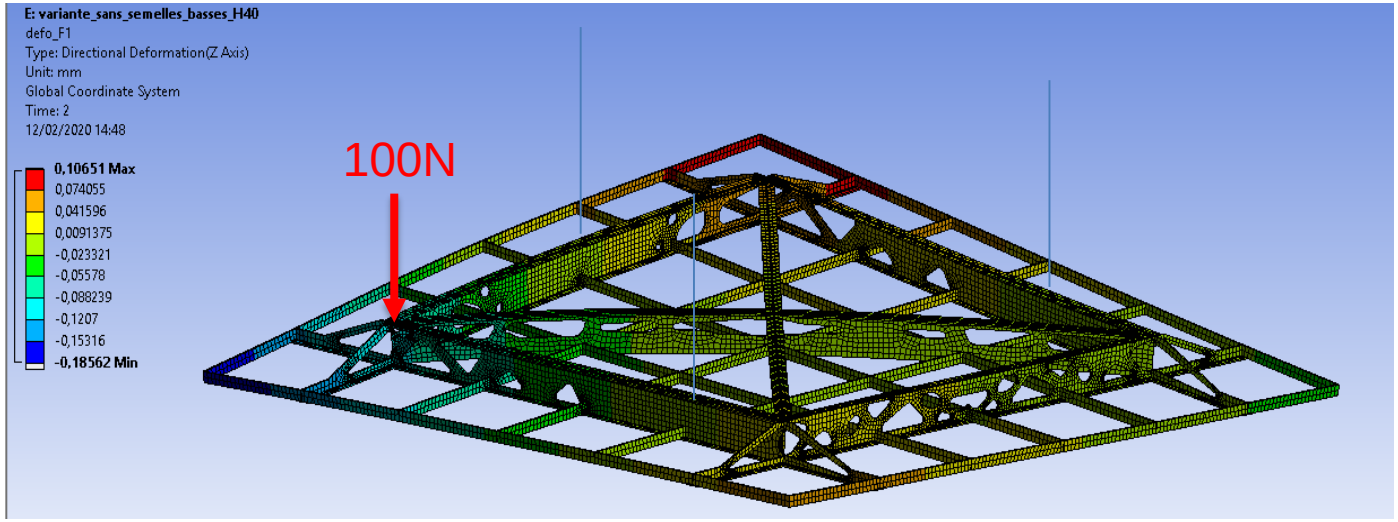

	Initial	Optimised
Static / 100N : max displacement	27mm	0,1 mm
First eigenfrequency	2 Hz	15,6 Hz
Invar mass	140 kg	216 kg

Shape optmisation deadline : 15th March
Final invar frame design deadline : 15th April --> Production

- New design validated with various loads (cryo, gravity, local load...)
- **Optimisation still in progress, very promising results.**

G10 frame upgrades

Previous design :

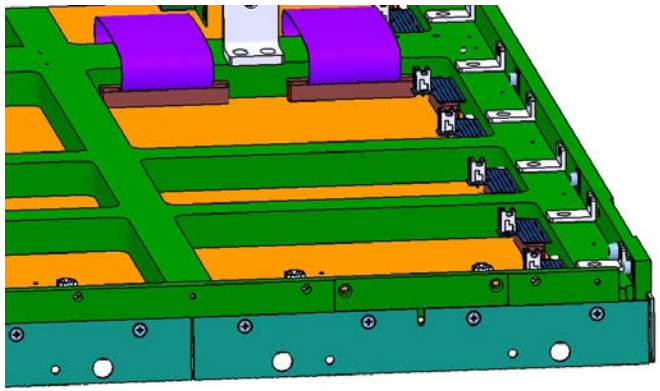

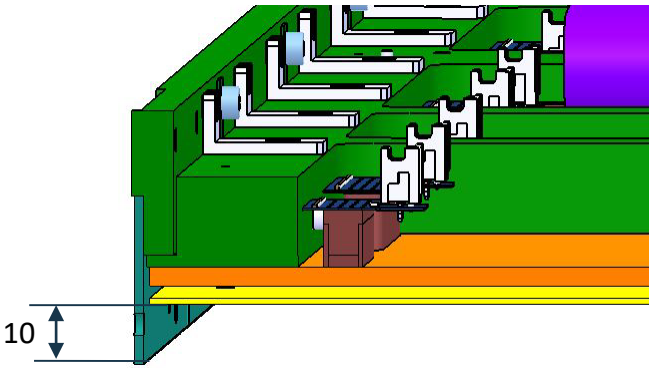

Upgraded design :

- Suppression of numerous parts
- No machining on the edges
- Globaly simplified machining
- Strengthening of weak parts
- --> Open to new manufacturers

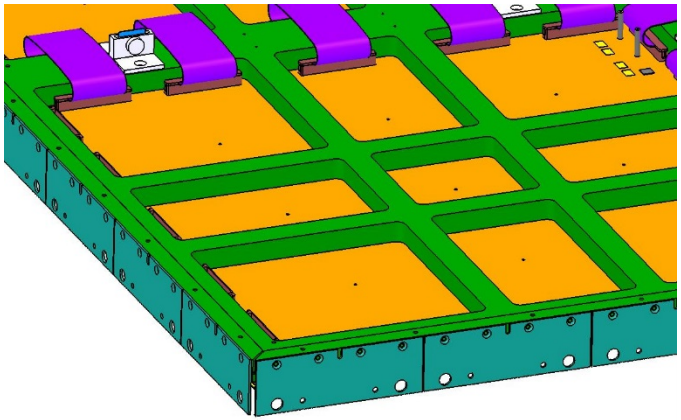

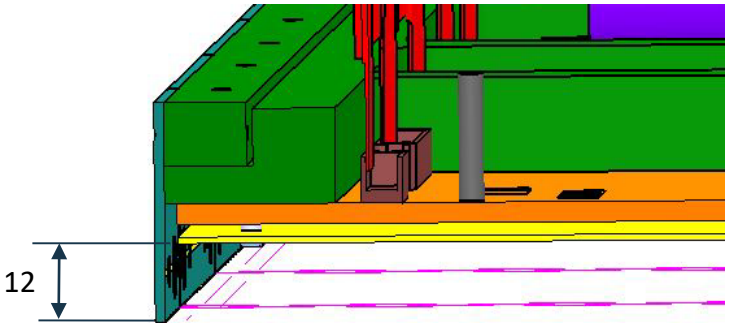

Final design deadline :
15th June--> Production

- Between invar and G10

➢ Widening of the washers and plate holes

➢ Simplification of the design

➢ Changes in the materials

  ➢ No more Stainless steel contact

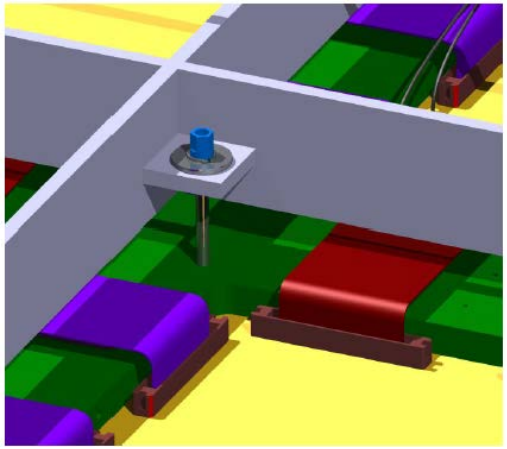

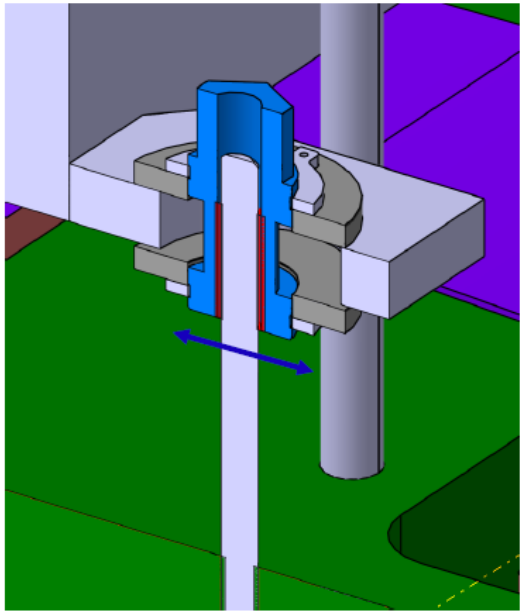

Extraction grid upgrades

Narrower PCBs : 40 wires (prev. 64)
3,125mm step is preserved

Not yet considered: resistive combs or alternative

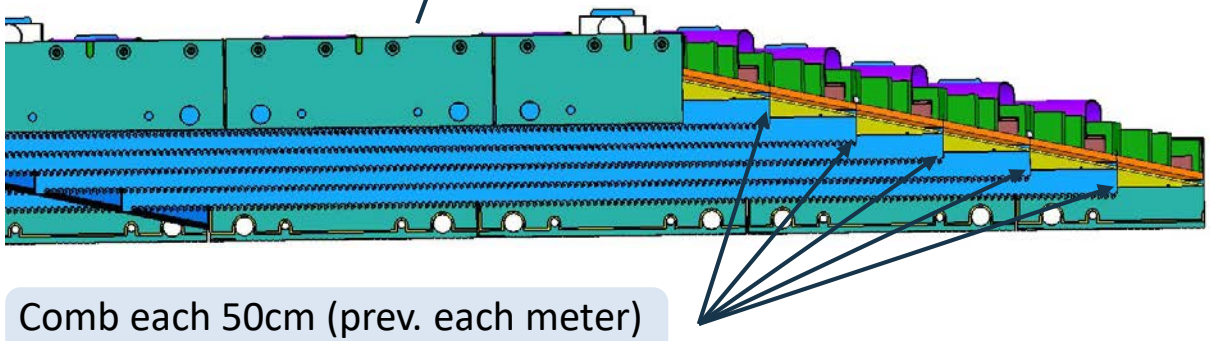

Comb each 50cm (prev. each meter)

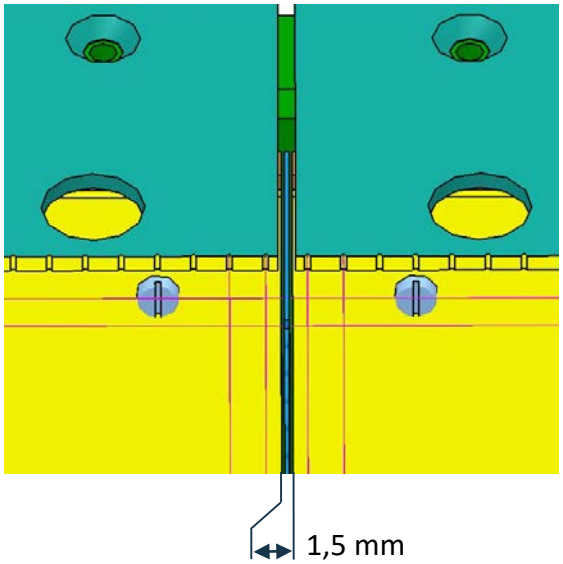

Combs thickening : 0,5mm (prev. 0,2mm)
→ Gap between LEMs is wider : 1,5 mm (prev. 0,5-0,8)

Combs optimisation in progress, for best wires positioning and support

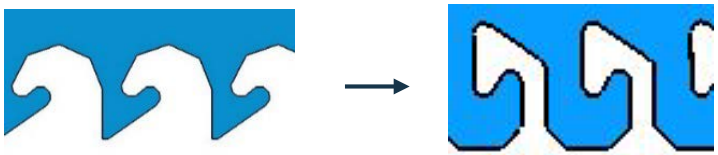

Grid fabrication: develop system to measure wire tension

Extraction grid PCBs upgrades

Spark guide:

→ Avoiding grid discharge on anodes or electronic

→ Concept and geometry ok?

→ How many special grid PCB necessary per CRP?

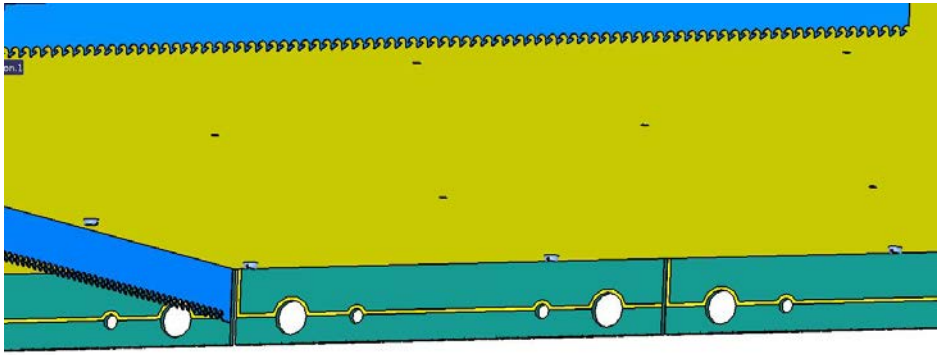

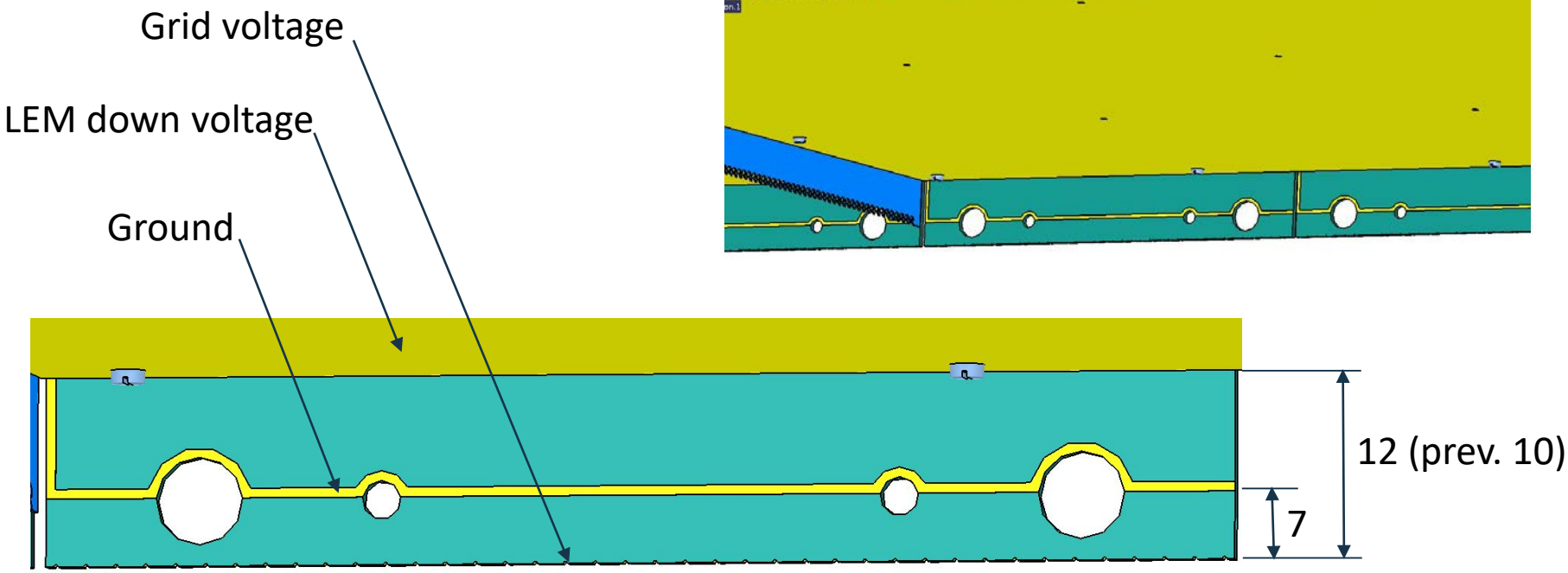

- LEMs - Anodes fixation
  - Orientations ok?
  - M2 holes, same positions, throughout G10

--> updated "Cabling layout" file available, to be finalized with cable lengths :

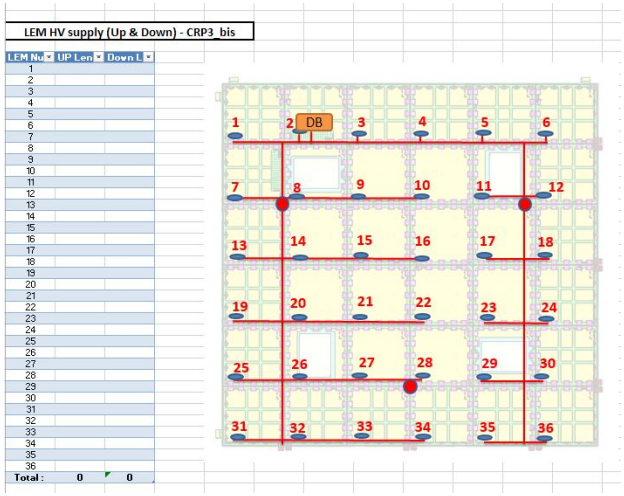

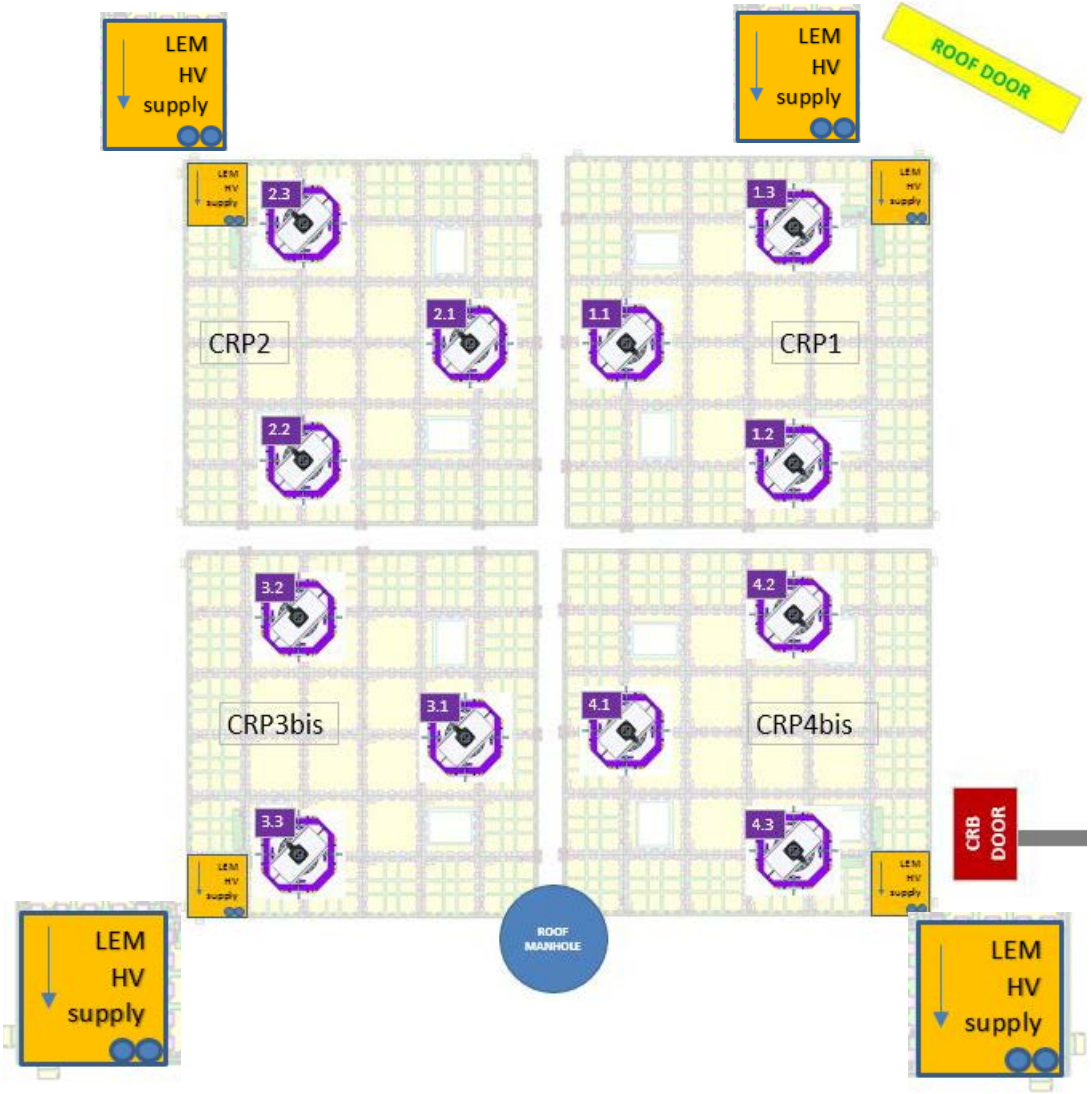

- XY suspensions suppression
- Electrostatic & Structural simulation of the grid in progress
- Electronic development - Thermal level-meters
  - To be defined soon
- CRPs lateral linking in discussion
  - Supression of unwilled lateral movements
  - To be defined soon

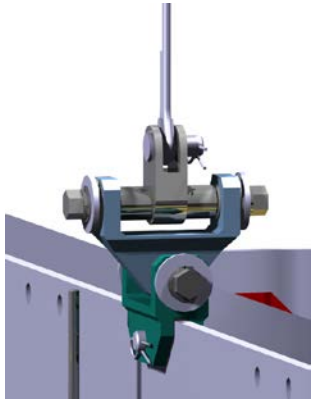

Measurements of lateral distance between CRPs, during global rising of the plane

--> Should be flat.

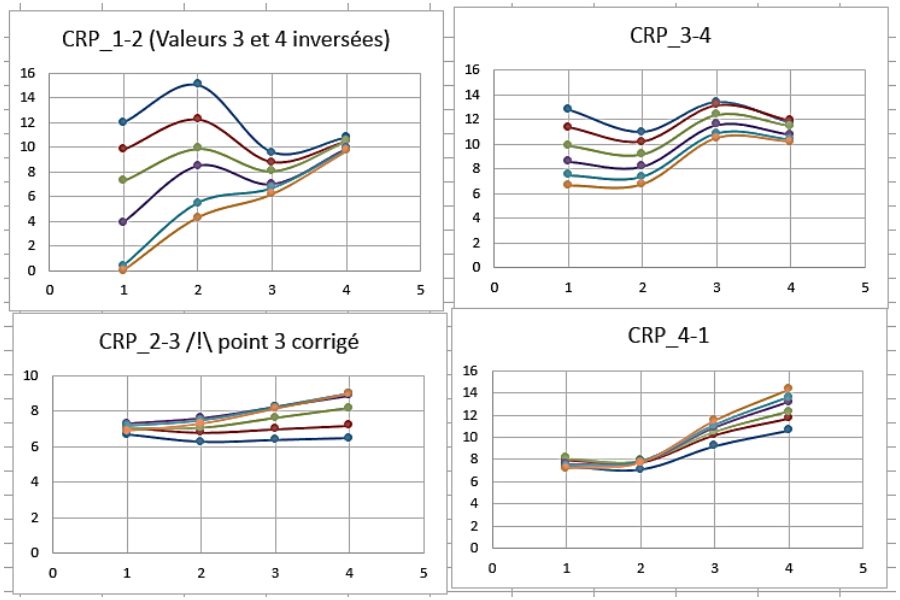

Construction - installation planning

June 2020 | January 2021 | April 2021 | August 2021 | March 2022

CRPs & tooling design

Sub-Parts manufacturing

Planarity / Cold test

CRP 3bis prod

CRP 4bis prod

Run

.mpp planing available

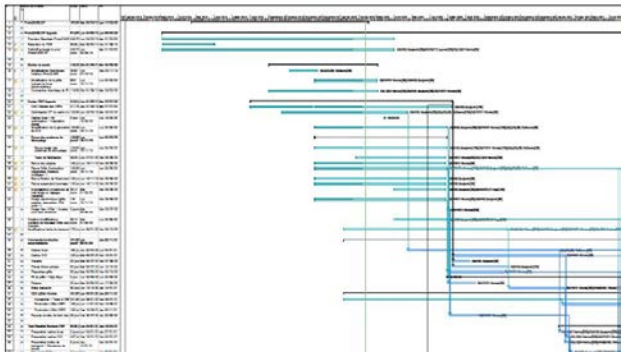

Cryostat available 06/2021

Construction - installation planning

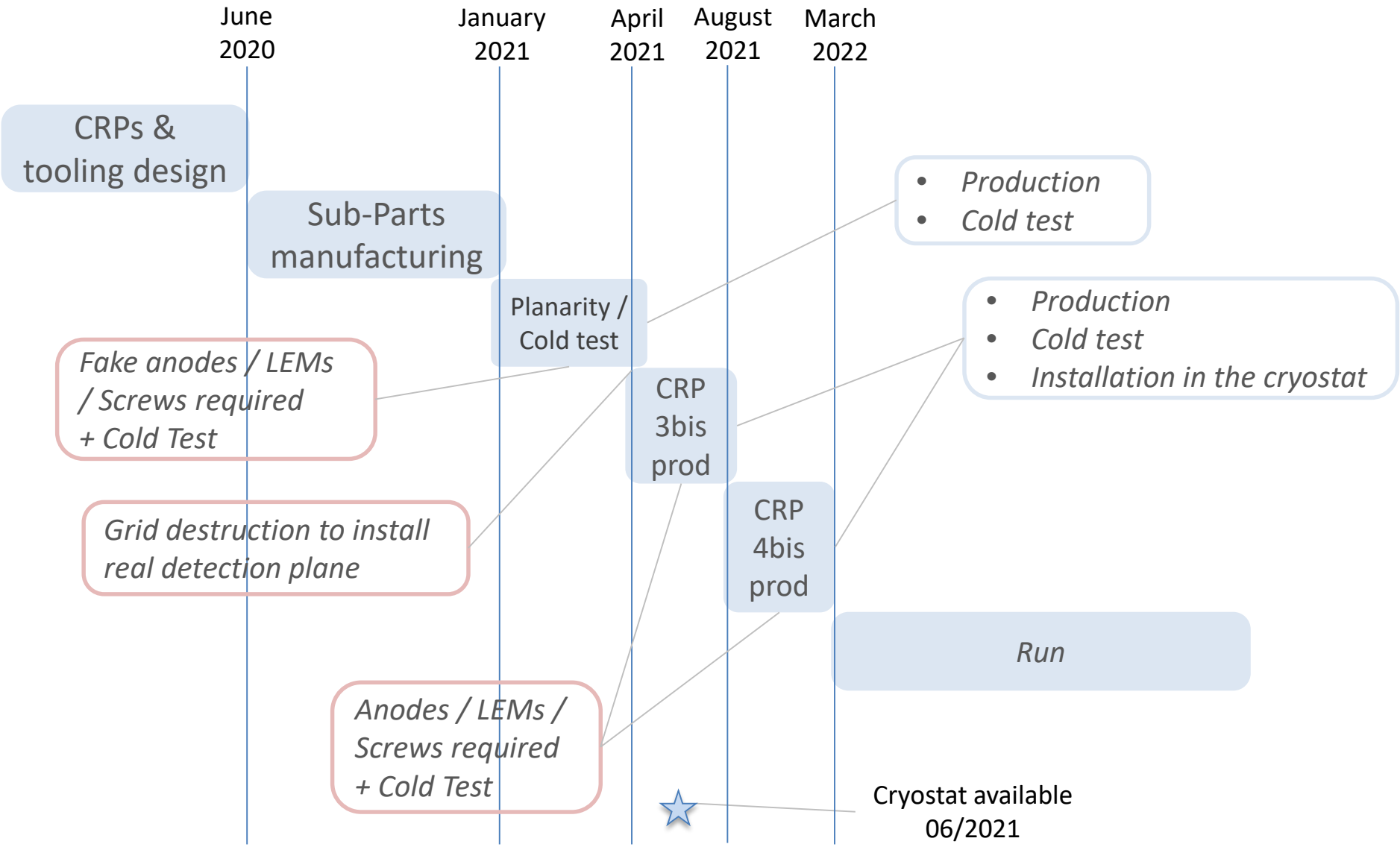
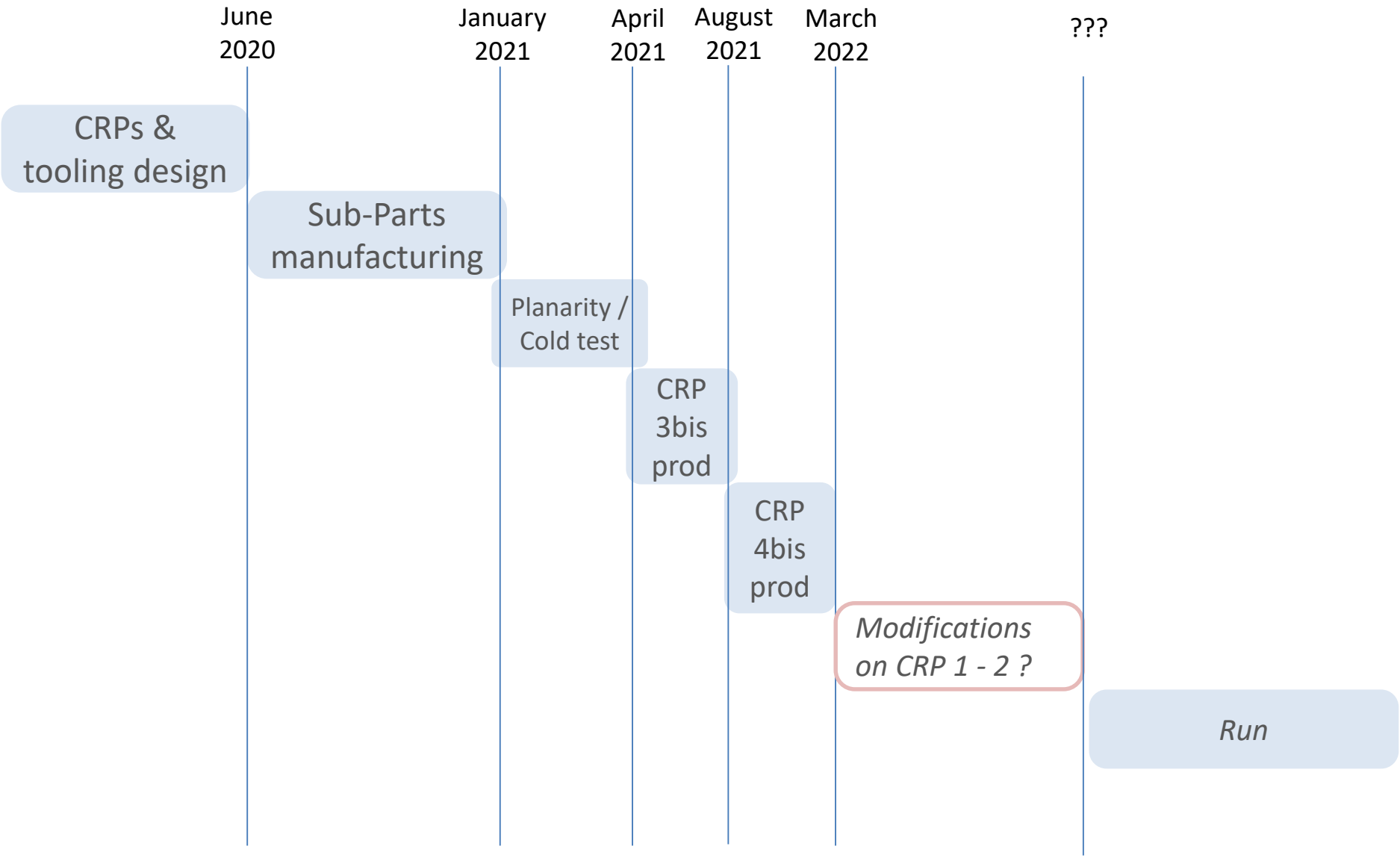
To be discussed