ESS NEUTRINO SUPER BEAM

Annual meeting 5-9 November 2018

Strasbourg, IPHC

4 Horns power supply (PSU) for 50Hz frequency pulsing

Present status of Euronu design studies

Pascal POUSSOT

PSU ELECTRICAL CONSTRAINTS

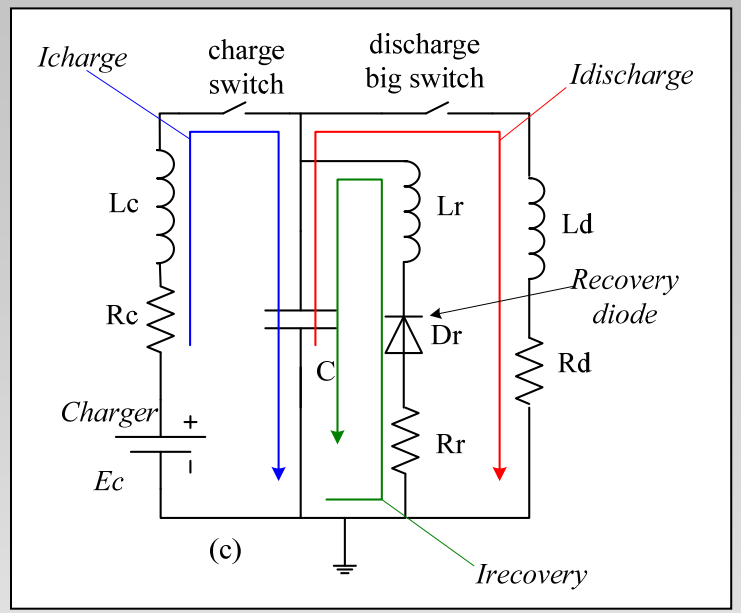

to deliver a half sinusoid of 100µs in a horn:

C=1000µF **Ec=11kV** $\hat{i} = 350\,kA$	***Charge*** Lc=25mH Rc=0.475Ω	***Discharge*** Ld=1.041µH Rd=0.89mΩ	***Recovery*** Lr=0.25mH Rr=5.94mΩ
$\frac{di(t=0)}{dt}$, **A/µs**		**10846**	43
$\hat{i}$, A	68	**350k**	21.6k
I_{RMS},A	41(50Hz)	10.4kA(16.66Hz)	4300(50Hz)

- capacitor charger Ec: +12kV-566kWrms: charge in 18ms at +-0.5%.
- high dI/dt of 11kA/µs due to very low inductance and high voltage.
- isolation to ground of electrical circuits: +-20kV with safety margin included.
- direct transmission by large strip-lines (0.6X0.01), length reduced to 33M.
- best efficiency with low values of discharge resistivity Rd (horn+striplines) and Rr (recovery circuit resistivity).
- lifetime of 13 billions cycles.

☑ modularity approach: based on 8 modules of 4X44kA branched in parallel

4X44kA MODULE: switch solutions

Discharge Big switch:

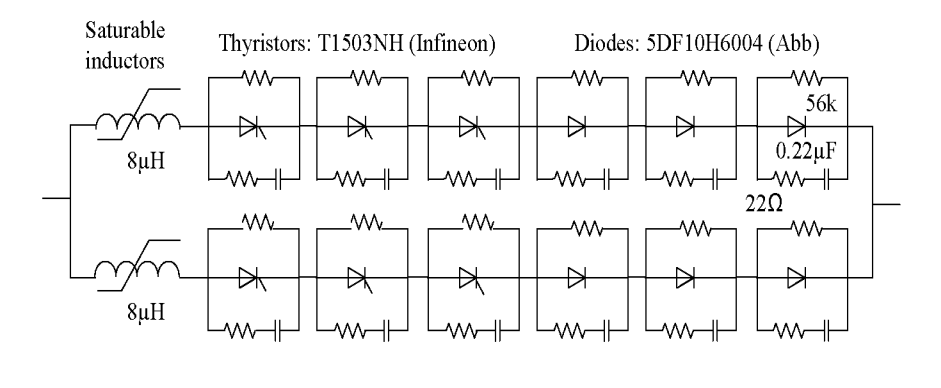

	Thyristor **T1503 Infineon**			Diode **5DF10H6004 ABB**	
	I_{TM} kA	V_{DRM} kV	$\frac{dI}{dt}$ kA/µs	V_{RRM} kV	Q_{RR} mC
Maximal	**40**	**7.5**	**5**	**6**	**6**
Simulations	**22.8**	**4**	**0.75**	**4.5**	**4.1**

direct voltage

reverse voltage

Recovery diode:

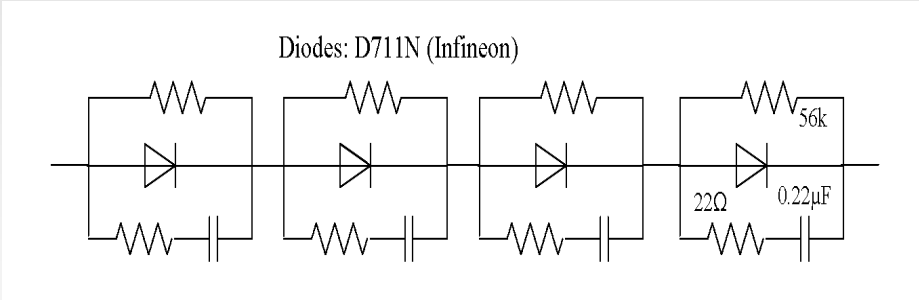

D711N	V_{RRM} kV	Q_{RR} mC
Maximal	**7**	**5.5**
Simulations	**3.5**	**3.2**

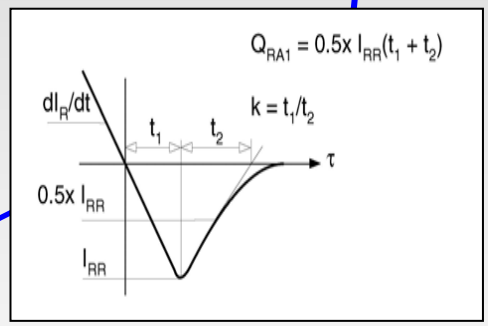

Qrr : reverse currents

☞ **lifetime of components : electrical constraints well below maximal characteristics**

PSU for 1 Horn: values of Rd & Ld

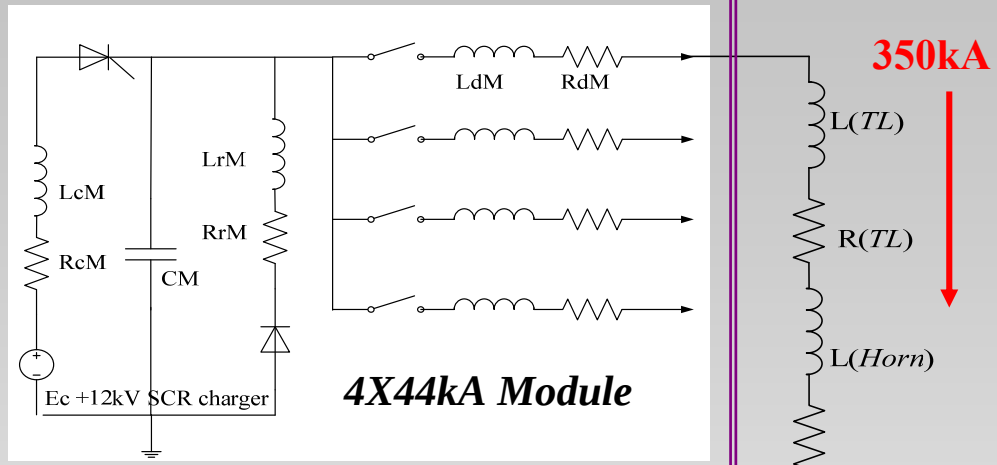

8 MODULES CONNECTED in PARALLEL

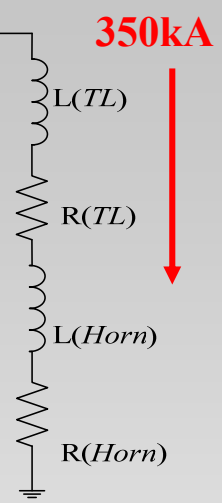

Resistivity and inductance (LdM,RdM) of bigswitch and recovery diode (LrM,RrM) for a 4X44kA module:

TOTAL module			LdM 260	RdM 1.86	LrM 2	RrM 47.48
			nH	mΩ	mH	mΩ
CM=120µF			50	0.20		
½ *Big Switch*	Saturable coil		120	0.2		
	3 diodes+ 3 thyistors		300	3.12		
Recovery stage	diode					3.48
	2mH coil				2	44

⇨ complete PSU

- Ld = LdM/8 + L(TL) + L(horn)
- Rd = RdM/8 + T(TL) +R(horn)

Resistivity and inductance of discharge circuit (Ld,Rd) of complete PSU

!!! Not defined electrical characteristics of connexions (horns <->striplines<-> PSUmodule)

PSU for 1 Horn	Ld nH	Rd mΩ
8 outputs of 44kA modules connected in //	32.5	0.235
1 TL (30m)	109	0.42
1 Horn	900	0.235
TOTAL	**1041**	**0.89**

4X44kA module: mechanical & thermal constraints

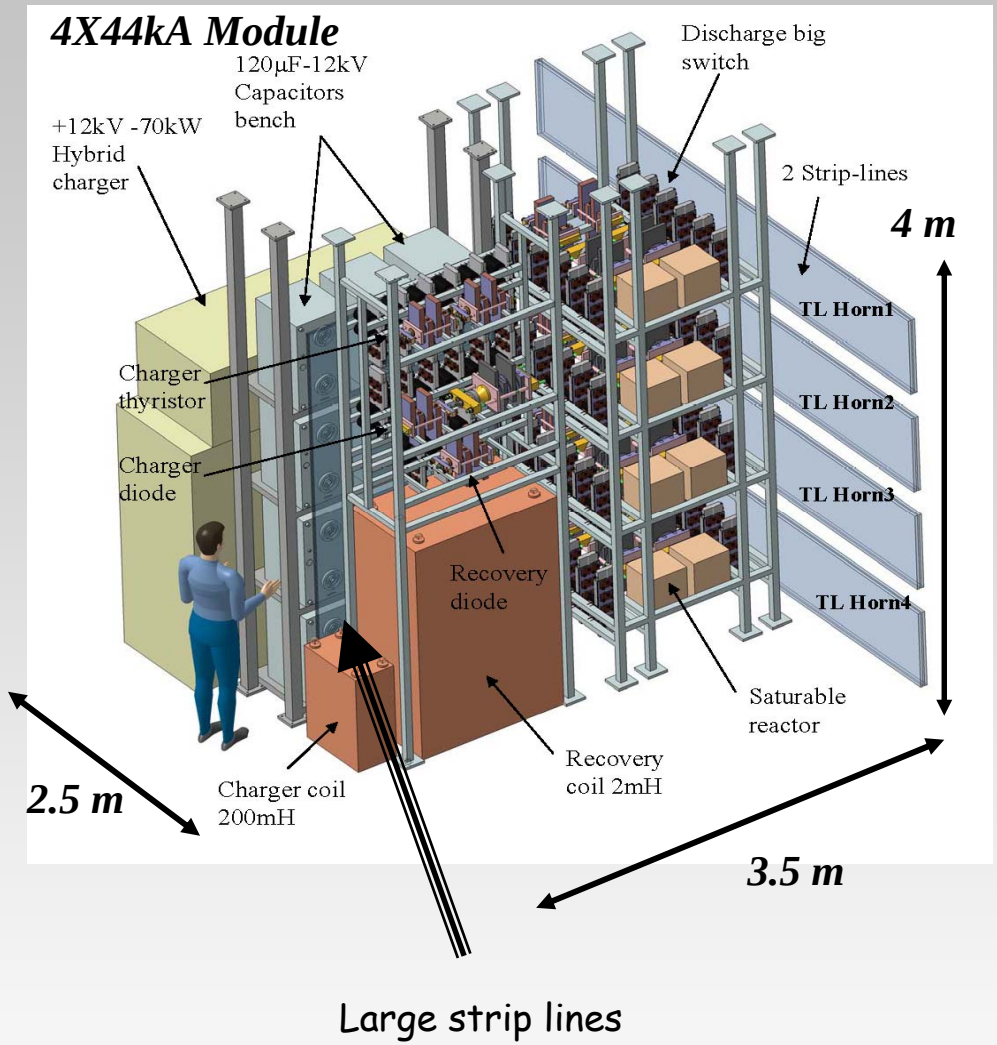

PSU 4X44kA module	Weight, KG	Thermal dissipation, W	
		Water cooling	*Air Cooling*
4 Big switches	1600	16000	1600
Recovery coil	2200	17000	
Hybrid charger	2400	7100	
Capacitor bench	1700		992
supports...	1000	-	-
TOTAL	**8.9T**	**45kW**	**2.6kW**

⇨ total ground area : 8,75m²

⇨ each set of components is extracted by 5T Crane for maintenance

⇨ ground mechanical constraints: 1T/m², 20T/m² at supports.

⇨ **95% of thermal dissipation extracted by water-cooling**

!!! dimensions of capacitor charger (+12kV-70KW) will be smaller with high frequency switching solutions

PSU 4 Horns: dimensions & thermal constraints

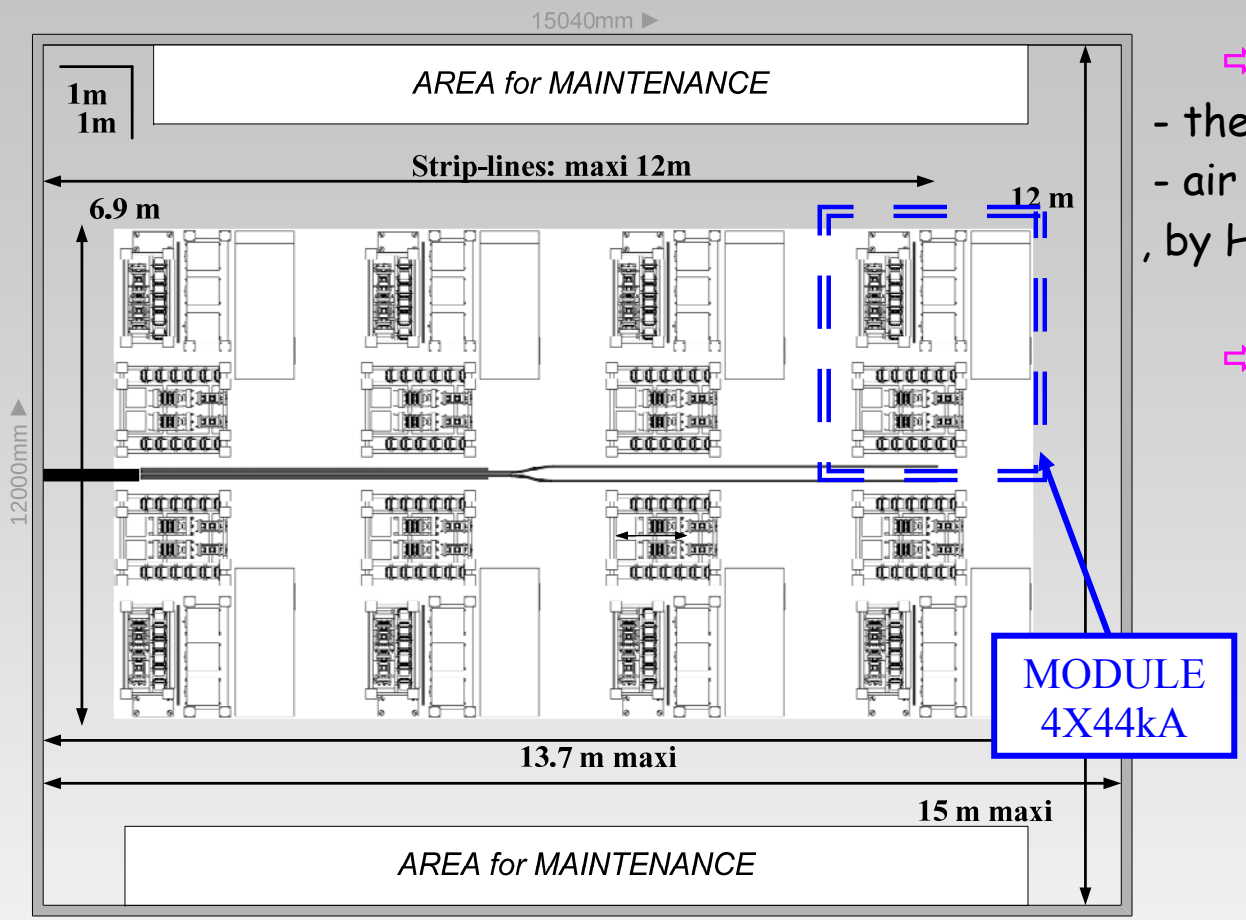

⇨ **Strip-line cooling:**

- thermal dissipation : 125W/ml/plate
- air cooling at 5m/s (Tmax=34.5°c)
, by He cooling at 15m/s (Tmax=33.9°c)

⇨ **Rooms air conditioning at 30°c maxi:**

Power dissipation by joule effect		kW	
		Water cooling	*Gas cooling*
PSU room	striplines (L=14m)		1.75X32 =56
	PSU	360	21
Intermediate room	striplines (L=10m)		1.25X32 =40
Wessel room	striplines (L=9.1m)		1.14X32 =36.4
	4 Horns	19X4 =76	
TOTAL	**540kW**	**436kW**	**153kW**

⇨ **PSU :**

- **dimensions:** W13.7m X D6.90m X H4m

- **room area:** width 15m X 12m: 180m²

contaminated area	no contaminated area
air cooling	He cooling

PSU evaluation of COSTS

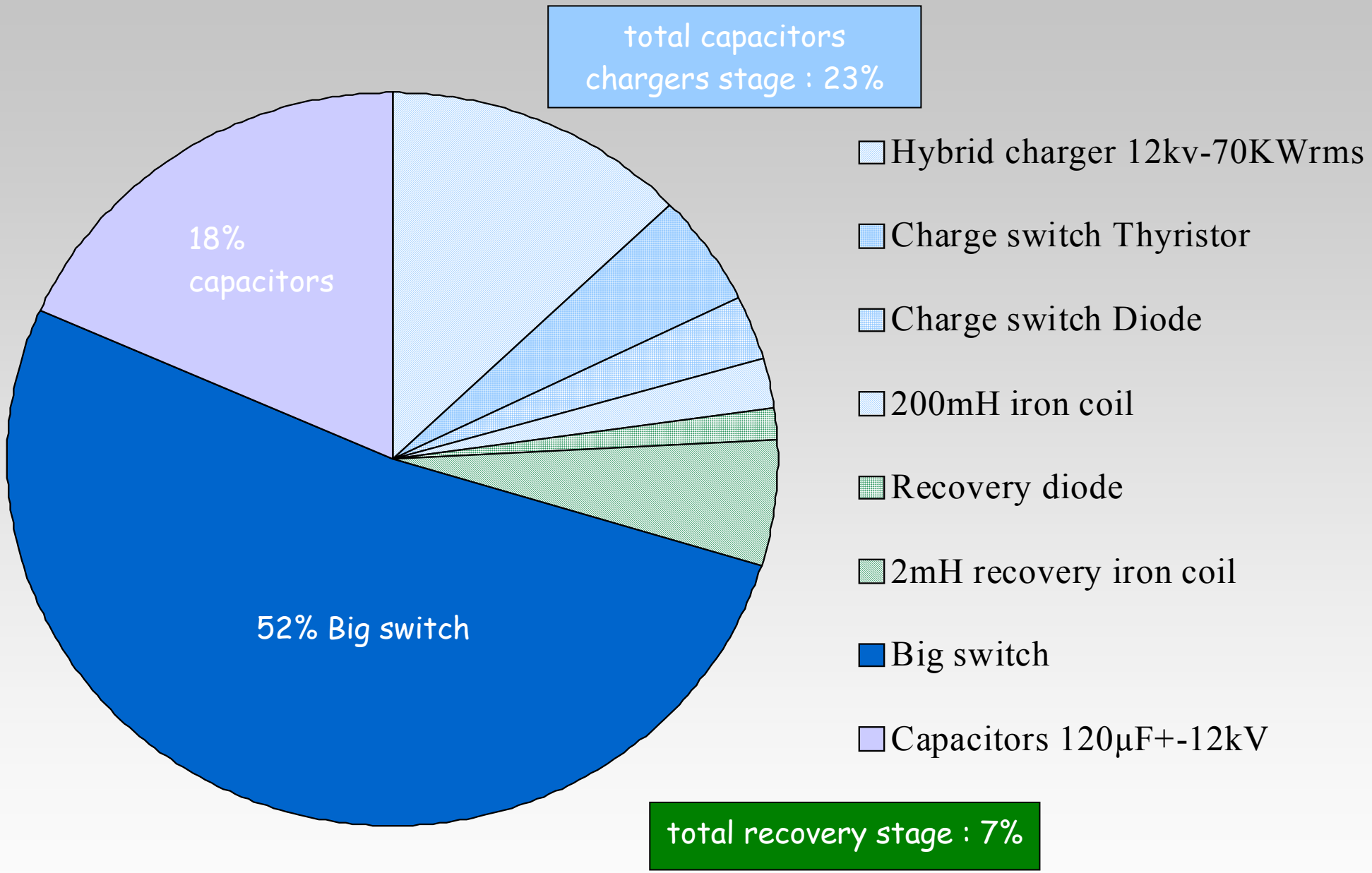

Thank you for your attention

[1] E. Baussan & al "Study of the pulse power supply unit for the four-horn system of the CERN to Fréjus neutrino" 2013 JINST 8 T07006 *(http://iopscience.iop.org/1748-0221/8/07/T07006).*

[2] E. Baussan & al « Updated Horn Studies » EUROnu WP2 Note 13.

[3] JM Maugain & al « Study of a horn with integrated target for a neutrino factory », 21 th May 2001 CERN-PS DIVISON.

[4] F. Voelker «Note concernant l'étude, en 2001-2003 au CERN, de l'alimentation de la corne NUFACT » Etude NUFACT, Mars 2011.

[5] Pascal POUSSOT « Skin effect and thermal dissipation in the strip-lines vs. frequency domain » EUROnu WP2 Note 10.14.

[6] Pascal POUSSOT « Study of 4 horns 350kA peak current, 100μs large & 50Hz electric power supply unit (PSU) with coupled direct devices », EUROnu WP2 Note 15.